B&P Elektromotoren

Industrial Motors

Commercial & Appliance Motors

Automation

Digital & Systems

Energy

Transmission & Distribution

Coatings

W22 PRIME

Three Phase
Low Voltage Motors
Europe Market

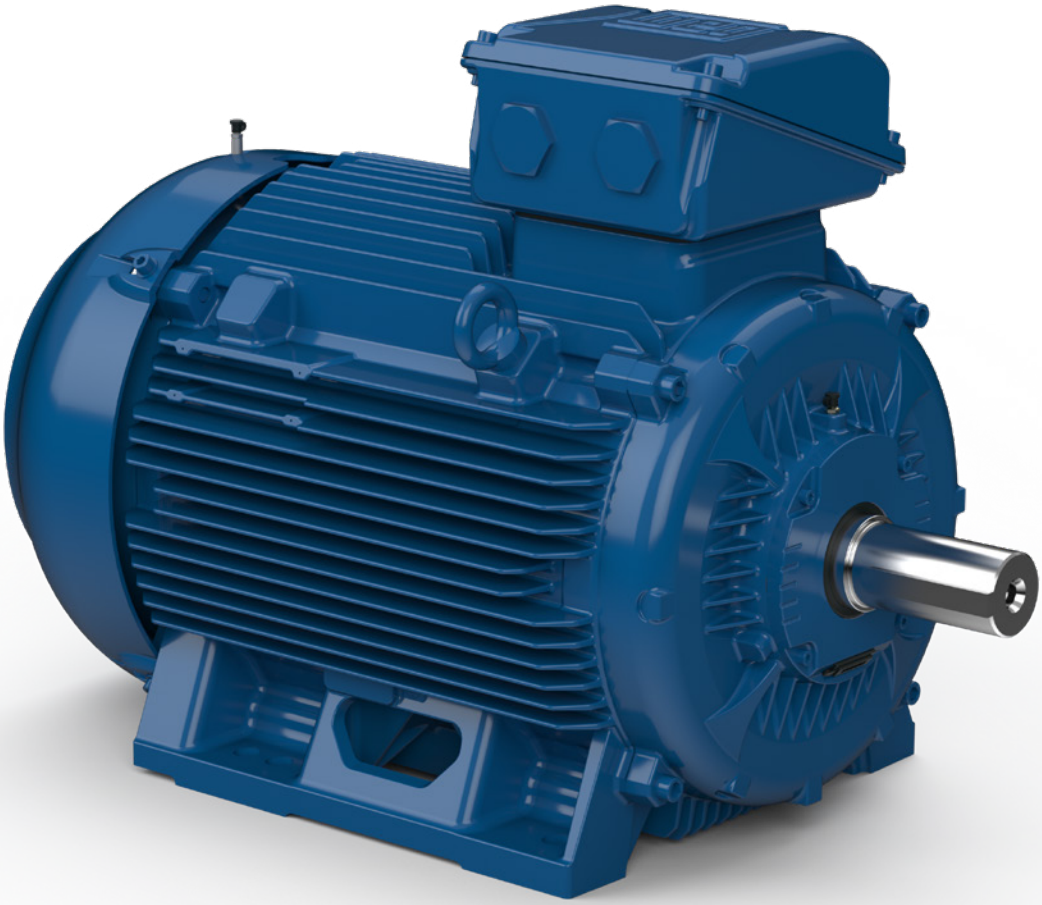

Driving efficiency and sustainability

"WHEN YOU LACK MACHINES, **YOU CAN BUY THEM.**

IF YOU DO NOT HAVE MONEY, **YOU CAN BORROW IT.**

BUT YOU CANNOT BUY OR BORROW PEOPLE, AND

people who are motivated by an idea are the basis of SUCCESS."

Eggon João da Silva

WEG is a global company and is regarded as one of the world's leading manufacturers of energy efficient electric motors, automation, power transmission, renewable resource technologies, solar, biomass and wind power generation, distribution equipment, and industrial coatings and varnishes.

Doing business in over 135 Countries, WEG is one of the top global players with background expertise to provide full turnkey systems for a wide variety of industrial applications.

Minimum Energy Performance Standards

Increasingly, the World seeks a path of sustainability and new ways to reduce energy consumption.

A significant percentage of the electrical energy utilized in facilities around the World is consumed by electric motors. Consequently, Governments around the World are implementing Energy Efficiency Programs in order to enforce the use of high efficiency motors.

Up until 2009, Europe did not have any specific regulations relating to the energy efficiency levels of electric motors. There existed only a voluntary agreement between Manufacturers from 1998 that determined the efficiency bands EFF1, EFF2 and EFF3.

However, in July 2009 Commission Regulation 640/2009 (implementing EuP Directive 2005/32/EC of July 2005) was adopted, which determined the ecodesign requirements relating to the scope, implementation dates and efficiency levels for electric motors and their use with variable speed drives. Also referred to as EU MEPS (European Minimum Energy Performance Standards), the efficiency levels for electric motors are determined in two IEC standards:

IEC/EN 60034-30-1, which details the efficiency classes in the form of 'IE' codes, and IEC/EN 60034-2-1 which defines the methods to be used to measure the efficiency. The EU Regulation is mandatory within the European Economic Area, EEA (EU countries plus Norway, Iceland and Liechenstein), from 16th of June 2011. EU MEPS does not apply outside Europe.

Manufacturers can continue to supply IE1 non-CE marked motors to customers located in Europe for further shipment to non-European markets, but these must of course respect any applicable energy efficiency legislation for the destination country of use.

EU Regulations referred are implemented into UK law through the Statutory Instrument 2021 No 745

A new version of the EuP Directive (2009/125/EC) became effective on 21st October 2009 to expand the ecodesign requirements for Energy Related Products, whilst January 2014 saw the adoption of the Commission Regulation 4/2014 (amending the scope of 640/2009) which came into force with effect from 27th July 2014.

Technical Features

Regulation	EU 1781/2019 and UK Statutory Instrument 2021 No. 745				
Standard	IEC 60034-30-1				
Power supply system	Three - phase				Single - phase
Minimum energy performance	IE3	IE2	IE4	IE2	IE2
Minimum energy performance when is able to operate with inverter frequency	IE3	IE2	IE4	IE2	Not applicable
Output (kW)	0,75 up to 1000 kW	0,12 up to <0,75kW	75 up to 200 kW	0,12 up to 1000 kW	
Number of poles	2,4,6 and 8		2,4 and 6	2,4,6 and 8	
Voltage (V)	up to 1000 V				
Frequency (Hz)	50Hz or 60 Hz				
Service Duty	S1, S3 ≥ 80% or S6 ≥ 80%				
Cooling method	TEFC, TEBC, ODP, TEAO				
Degree of protection	IP 00 up to IP 66				
Area classification	Safety and hazardous area (Ex ec, Ex tc, Ex tb, Ex db, Ex db eb)		Safety area	Hazardous area (Ex eb)	Safety are
Altitude	Up to 4000 m				
Ambient temperature	-30 up to 60 ºC				
Required documentation	Self declaration				

50Hz

Output	IE1			
	Poles			
kW	2	4	6	8
0,12	45,0	50,0	38,3	31,0
0,18	52,8	57,0	45,5	38,0
0,20	54,6	58,5	47,6	39,7
0,25	58,2	61,5	52,1	43,4
0,37	63,9	66,0	59,7	49,7
0,40	64,9	66,8	61,1	50,9
0,55	69,0	70,0	65,8	56,1
0,75	72,1	72,1	70,0	61,2
1,1	75,0	75,0	72,9	66,5
1,5	77,2	77,2	75,2	70,2
2,2	79,7	79,7	77,7	74,2
3	81,5	81,5	79,7	77,0
4	83,1	83,1	81,4	79,2
5,5	84,7	84,7	83,1	81,4
7,5	86,0	86,0	84,7	83,1
11	87,6	87,6	86,4	85,0
15	88,7	88,7	87,7	86,2
18,5	89,3	89,3	88,6	86,9
22	89,9	89,9	89,2	87,4
30	90,7	90,7	90,2	88,3
37	91,2	91,2	90,8	88,8
45	91,7	91,7	91,4	89,2
55	92,1	92,1	91,9	89,7
75	92,7	92,7	92,6	90,3
90	93,0	93,0	92,9	90,7
110	93,3	93,3	93,3	91,1
132	93,5	93,5	93,5	91,5
160	93,8	93,8	93,8	91,9
200 up to 1000	94,0	94,0	94,0	92,5

Output	IE2			
	Poles			
kW	2	4	6	8
0,12	53,6	59,1	50,6	39,8
0,18	60,4	64,7	56,6	45,9
0,20	61,9	65,9	58,2	47,4
0,25	64,8	68,5	61,6	50,6
0,37	69,5	72,7	67,6	56,1
0,40	70,4	73,5	68,8	57,2
0,55	74,1	77,1	73,1	61,7
0,75	77,4	79,6	75,9	66,2
1,1	79,6	81,4	78,1	70,8
1,5	81,3	82,8	79,8	74,1
2,2	83,2	84,3	81,8	77,6
3	84,6	85,5	83,3	80,0
4	85,8	86,6	84,6	81,9
5,5	87,0	87,7	86,0	83,8
7,5	88,1	88,7	87,2	85,3
11	89,4	89,8	88,7	86,9
15	90,3	90,6	89,7	88,0
18,5	90,9	91,2	90,4	88,6
22	91,3	91,6	90,9	89,1
30	92,0	92,3	91,7	89,8
37	92,5	92,7	92,2	90,3
45	92,9	93,1	92,7	90,7
55	93,2	93,5	93,1	91,0
75	93,8	94,0	93,7	91,6
90	94,1	94,2	94,0	91,9
110	94,3	94,5	94,3	92,3
132	94,6	94,7	94,6	92,6
160	94,8	94,9	94,8	93,0
200 up to 1000	95,0	95,1	95,0	93,5

Output	IE3			
	Poles			
kW	2	4	6	8
0,12	60,8	64,8	57,7	50,7
0,18	65,9	69,9	63,9	58,7
0,20	67,2	71,1	65,4	60,6
0,25	69,7	73,5	68,6	64,1
0,37	73,8	77,3	73,5	69,3
0,40	74,6	78,0	74,4	70,1
0,55	77,8	80,8	77,2	73,0
0,75	80,7	82,5	78,9	75,0
1,1	82,7	84,1	81,0	77,7
1,5	84,2	85,3	82,5	79,7
2,2	85,9	86,7	84,3	81,9
3	87,1	87,7	85,6	83,5
4	88,1	88,6	86,8	84,8
5,5	89,2	89,6	88,0	86,2
7,5	90,1	90,4	89,1	87,3
11	91,2	91,4	90,3	88,6
15	91,9	92,1	91,2	89,6
18,5	92,4	92,6	91,7	90,1
22	92,7	93,0	92,2	90,6
30	93,3	93,6	92,9	91,3
37	93,7	93,9	93,3	91,8
45	94,0	94,2	93,7	92,2
55	94,3	94,6	94,1	92,5
75	94,7	95,0	94,6	93,1
90	95,0	95,2	94,9	93,4
110	95,2	95,4	95,1	93,7
132	95,4	95,6	95,4	94,0
160	95,6	95,8	95,6	94,3
200 up to 1000	95,8	96,0	95,8	94,6

Output	IE4			
	Poles			
kW	2	4	6	8
0,12	66,5	69,8	64,9	62,3
0,18	70,8	74,7	70,1	67,2
0,20	71,9	75,8	71,4	68,4
0,25	74,3	77,9	74,1	70,8
0,37	78,1	81,1	78,0	74,3
0,40	78,9	81,7	78,7	74,9
0,55	81,5	83,9	80,9	77,0
0,75	83,5	85,7	82,7	78,4
1,1	85,2	87,2	84,5	80,8
1,5	86,5	88,2	85,9	82,6
2,2	88,0	89,5	87,4	84,5
3	89,1	90,4	88,6	85,9
4	90,0	91,1	89,5	87,1
5,5	90,9	91,9	90,5	88,3
7,5	91,7	92,6	91,3	89,3
11	92,6	93,3	92,3	90,4
15	93,3	93,9	92,9	91,2
18,5	93,7	94,2	93,4	91,7
22	94,0	94,5	93,7	92,1
30	94,5	94,9	94,2	92,7
37	94,8	95,2	94,5	93,1
45	95,0	95,4	94,8	93,4
55	95,3	95,7	95,1	93,7
75	95,6	96,0	95,4	94,2
90	95,8	96,1	95,6	94,4
110	96,0	96,3	95,8	94,7
132	96,2	96,4	96,0	94,9
160	96,3	96,6	96,2	95,1
200 up to 1000	96,5	96,7	96,3	95,4

Output	IE5			
	Poles			
kW	2	4	6	8
0,12	71,4	74,3	69,8	67,4
0,18	75,2	78,7	74,6	71,9
0,20	76,2	79,6	75,7	73,0
0,25	78,3	81,5	78,1	75,2
0,37	81,7	84,3	81,6	78,4
0,40	82,3	84,8	82,2	78,9
0,55	84,6	86,7	84,2	80,6
0,75	86,3	88,2	85,7	82,0
1,1	87,8	89,5	87,2	84,0
1,5	88,9	90,4	88,4	85,5
2,2	90,2	91,4	89,7	87,2
3	91,1	92,1	90,6	88,4
4	91,8	92,8	91,4	89,4
5,5	92,6	93,4	92,2	90,4
7,5	93,3	94,0	92,9	91,3
11	94,0	94,6	93,7	92,2
15	94,5	95,1	94,3	92,9
18,5	94,9	95,3	94,6	93,3
22	95,1	95,5	94,9	93,6
30	95,5	95,9	95,3	94,1
37	95,8	96,1	95,6	94,4
45	96,0	96,3	95,8	94,7
55	96,2	96,5	96,0	94,9
75	96,5	96,7	96,3	95,3
90	96,6	96,9	96,5	95,5
110	96,8	97,0	96,6	95,7
132	96,9	97,1	96,8	95,9
160	97,0	97,2	96,9	96,1
200 up to 1000	97,2	97,4	97,0	96,3

60Hz

Output	IE1			
	Poles			
kW	2	4	6	8
0,12	57,5	62,0	48,0	36,0
0,18	62,0	66,0	52,5	40,0
0,25	64,0	68,0	57,5	50,5
0,37	70,0	70,0	62,0	57,5
0,55	72,0	74,0	66,0	59,5
0,75	74,0	77,0	72,0	64,0
1,1	78,5	79,0	75,0	73,5
1,5	81,0	81,5	77,0	77,0
2,2	81,5	83,0	78,5	78,0
3,7	84,5	85,0	83,5	80,0
5,5	86,0	87,0	85,0	84,0
7,5	87,5	87,5	86,0	85,0
11	87,5	88,5	89,0	87,5
15	88,5	89,5	89,5	88,5
18,5	89,5	90,5	90,2	88,5
22	89,5	91,0	91,0	90,2
30	90,2	91,7	91,7	90,2
37	91,5	92,4	91,7	91,0
45	91,7	93,0	91,7	91,0
55	92,4	93,0	92,1	91,5
75	93,0	93,2	93,0	92,0
90	93,0	93,2	93,0	92,5
110	93,0	93,5	94,1	92,5
150 up to 1000	94,1	94,5	94,1	92,5

Output	IE2			
	Poles			
kW	2	4	6	8
0,12	59,5	64,0	50,5	40,0
0,18	64,0	68,0	55,0	46,0
0,25	68,0	70,0	59,5	52,0
0,37	72,0	72,0	64,0	58,0
0,55	74,0	75,5	68,0	62,0
0,75	75,5	78,0	73,0	66,0
1,1	82,5	84,0	85,5	75,5
1,5	84,0	84,0	86,5	82,5
2,2	85,5	87,5	87,5	84,0
3,7	87,5	87,5	87,5	85,5
5,5	88,5	89,5	89,5	85,5
7,5	89,5	89,5	89,5	88,5
11	90,2	91,0	90,2	88,5
15	90,2	91,0	90,2	89,5
18,5	91,0	92,4	91,7	89,5
22	91,0	92,4	91,7	91,0
30	91,7	93,0	93,0	91,0
37	92,4	93,0	93,0	91,7
45	93,0	93,6	93,6	91,7
55	93,0	94,1	93,6	93,0
75	93,6	94,5	94,1	93,0
90	94,5	94,5	94,1	93,6
110	94,5	95,0	95,0	93,6
150	95,0	95,0	95,0	93,6
185	95,4	95,0	95,0	93,6
220 up to 335	95,4	95,4	95,0	93,6
375 up to 1000	95,4	95,8	95,0	94,1

Output	IE3			
	Poles			
kW	2	4	6	8
0,12	62,0	66,0	64,0	59,5
0,18	65,6	69,5	67,5	64,0
0,25	69,5	73,4	71,4	68,0
0,37	73,4	78,2	75,3	72,0
0,55	76,8	81,1	81,7	74,0
0,75	77,0	83,5	82,5	75,5
1,1	84,0	86,5	87,5	78,5
1,5	85,5	86,5	88,5	84,0
2,2	86,5	89,5	89,5	85,5
3,7	88,5	89,5	89,5	86,5
5,5	89,5	91,7	91,0	86,5
7,5	90,2	91,7	91,0	89,5
11	91,0	92,4	91,7	89,5
15	91,0	93,0	91,7	90,2
18,5	91,7	93,6	93,0	90,2
22	91,7	93,6	93,0	91,7
30	92,4	94,1	94,1	91,7
37	93,0	94,5	94,1	92,4
45	93,6	95,0	94,5	92,4
55	93,6	95,4	94,5	93,6
75	94,1	95,4	95,0	93,6
90	95,0	95,4	95,0	94,1
110	95,0	95,8	95,8	94,1
150	95,4	96,2	95,8	94,5
185 up to 1000	95,8	96,2	95,8	95,0

Output	IE4			
	Poles			
kW	2	4	6	8
0,12	66,0	70,0	68,0	64,0
0,18	70,0	74,0	72,0	68,0
0,25	74,0	77,0	75,5	72,0
0,37	77,0	81,5	78,5	75,5
0,55	80,0	84,0	82,5	77,0
0,75	82,5	85,5	84,0	78,5
1,1	85,5	87,5	88,5	81,5
1,5	86,5	88,5	89,5	85,5
2,2	88,5	91,0	90,2	87,5
3,7	89,5	91,0	90,2	88,5
5,5	90,2	92,4	91,7	88,5
7,5	91,7	92,4	92,4	91,0
11	92,4	93,6	93,0	91,0
15	92,4	94,1	93,0	91,7
18,5	93,0	94,5	94,1	91,7
22	93,0	94,5	94,1	93,0
30	93,6	95,0	95,0	93,0
37	94,1	95,4	95,0	93,6
45	94,5	95,4	95,4	93,6
55	94,5	95,8	95,4	94,5
75	95,0	96,2	95,8	94,5
90	95,4	96,2	95,8	95,0
110	95,4	96,2	96,2	95,0
150	95,8	96,5	96,2	95,4
185	96,2	96,5	96,2	95,4
220	96,2	96,8	96,5	95,4
250 up to 1000	96,2	96,8	96,5	95,8

Output	IE5			
	Poles			
kW	2	4	6	8
0,12	70,8	74,5	72,6	69
0,18	74,5	78,1	76,3	72,6
0,25	78,1	80,7	79,4	76,3
0,37	80,7	84,6	82	79,4
0,55	83,3	86,8	85,5	80,7
0,75	85,5	88,1	86,8	82
1,1	88,1	89,7	90,6	84,6
1,5	88,9	90,6	91,4	88,1
2,2	90,6	92,7	92	89,7
3,7	91,4	92,7	92	90,6
5,5	92	93,8	93,2	90,6
7,5	93,2	93,8	93,8	92,7
11	93,8	94,8	94,3	92,7
15	93,8	95,2	94,3	93,2
18,5	94,3	95,6	95,2	93,2
22	94,3	95,6	95,2	94,3
30	94,8	96	96	94,3
37	95,2	96,3	96	94,8
45	95,6	96,3	96,3	94,8
55	95,6	96,6	96,3	95,6
75	96	96,9	96,6	95,6
90	96,3	96,9	96,6	96
110	96,3	96,9	96,9	96
150	96,6	97,2	96,9	96,3
185	96,9	97,2	96,9	96,3
220	96,9	97,4	97,2	96,3
250 up to 1000	96,9	97,4	97,2	96,6

Minimum efficiency levels (according to IEC 60034-30-1:2025).

WEG can support the movement towards these high efficiency levels by offering a comprehensive range of products meeting the IE1, IE2, IE3, IE4 and IE5 criteria detailed above. Additionally our variable speed drives are perfectly matched to our motors, affording you the most reliable package of motor / drive products in industry.

W22 *Prime*

The evolution of induction motors, now reaching IE5 efficiency

Meet the W22 *Prime*, the evolution of WEG induction motors, delivering up to IE5 efficiency across the widest range of frame sizes on the market, with uncompromised simplicity. Engineered to replace low-efficiency motors, it integrates seamlessly into existing systems, providing immediate energy savings, reduced emissions and a streamlined path to next-level performance. More productivity, more results, more possibilities. Be efficient. Be *Prime.*

CONTRIBUTES TO REDUCE EMISSIONS

DIRECT-ON-LINE (DOL) AND VARIABLE SPEED DRIVE (VSD) OPERATION

36-MONTH WARRANTY

IE5
EFFICIENCY
Driving efficiency and sustainability

W22 PRIME | Index

1 Versions Available 4
2 Standards 4
3 Construction Details 4
3.1 Frame 4
3.2 Eyebolts 5
3.3 Points for Vibration Monitoring 5
3.4 Earth Terminals 5
3.5 Terminal Box 5
3.6 Power Supply Connection Leads 6
3.7 Accessory Connection Leads 6
3.8 Endshields 6
3.9 Drains 7
3.10 Fan Cover 7
3.11 Nameplate 7
4 Cooling System and Noise Level / Vibration Level / Impact Resistance 7
4.1 Cooling System 7
4.2 Noise Level 8
4.3 Vibration Level 8
4.4 Impact Resistance 8
5 Shaft / Bearings 8
5.1 Shaft 8
5.2 Bearings 8
5.3 Permissible Loads 10
5.3.1 Bearing Monitoring 12
6 Mounting Forms 12
7 Degree of Protection / Sealing System / Painting 12
7.1 Degree of Protection 12
7.2 Sealing System 13
7.3 Painting 13
7.3.1 Tropicalized Painting 13
8 Voltage / Frequency 13
9 Overload Capacity 14
10 Ambient and Altitude 14
11 Insulation & Temperature Rise 14
11.1 Space Heaters 14
11.2 Motor Protections 15
11.2.1 Pt-100 15
11.2.2 Thermistor (PTC) 15
11.2.3 Bimetallic Thermal Protectors 15
11.3 Protection Based on Operating Current 15
12 Variable Speed Drive Application 16
12.1 Considerations Regarding Voltage Spikes and the Insulation System 16
13 Influence of the VSD on the Motor Temperature 16
13.1.1 Torque Derating Criteria 16

Exploded view

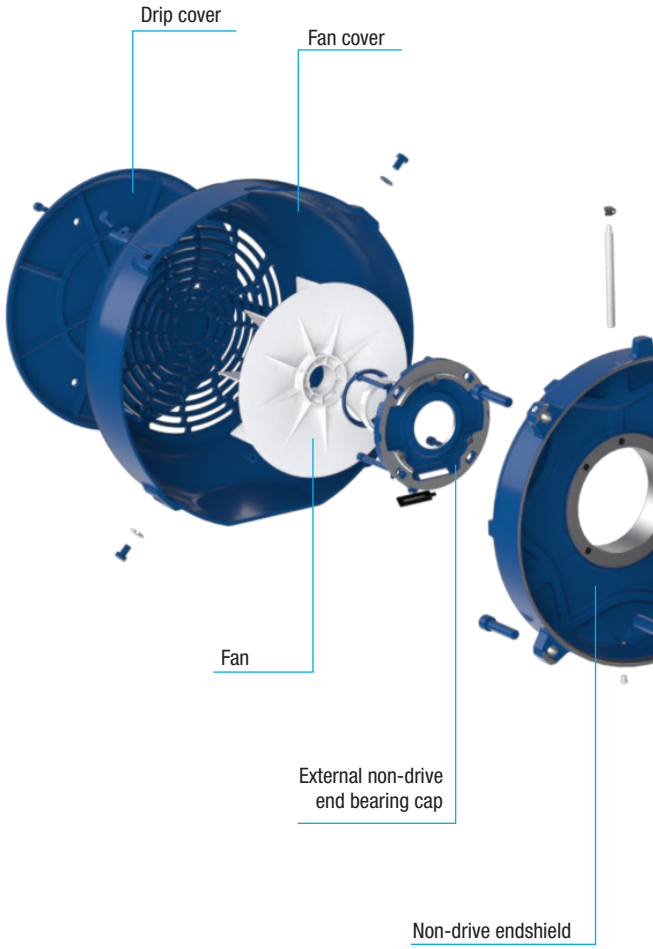

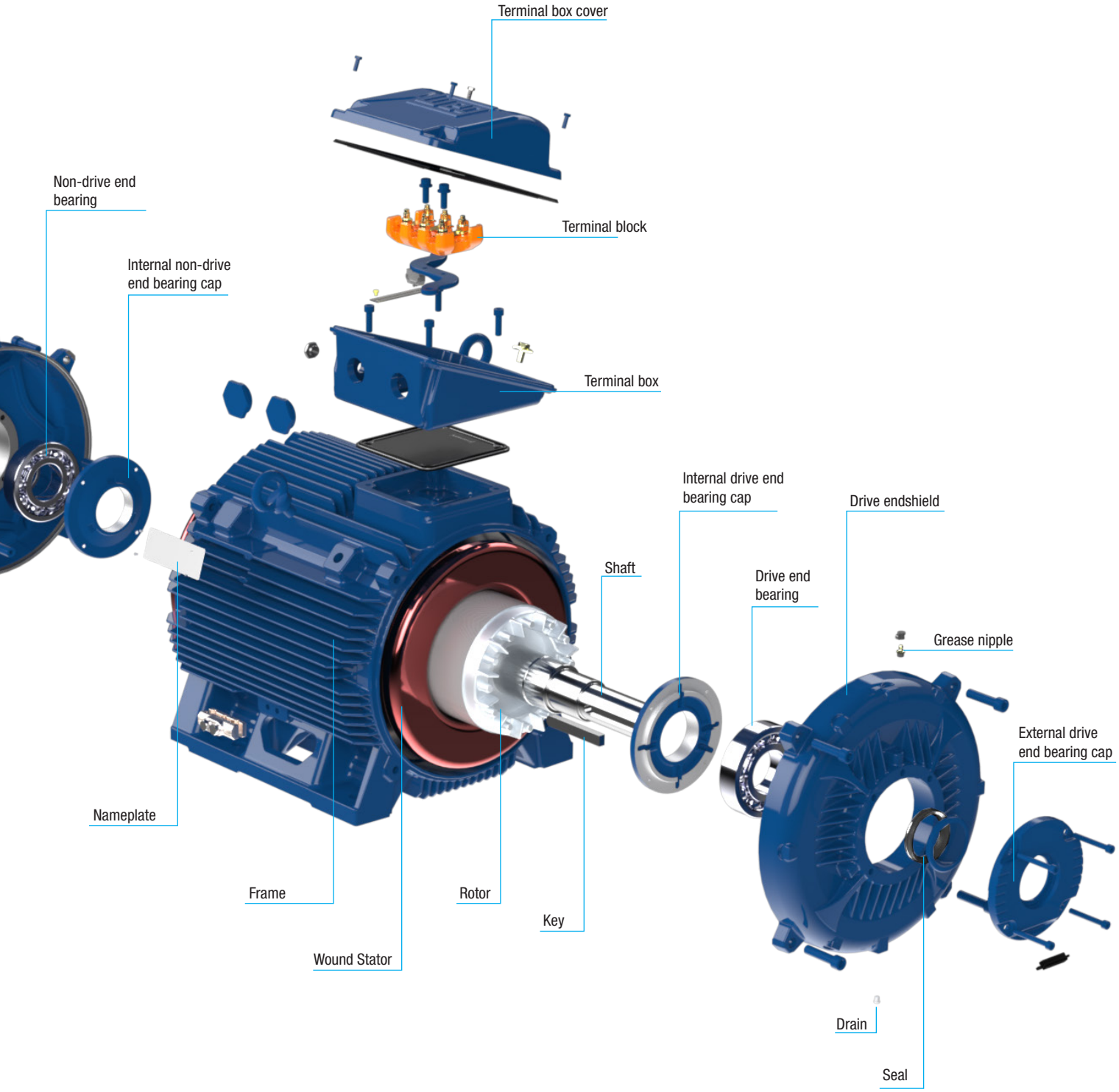
Terminal box cover
Non-drive end bearing
Terminal block
Internal non-drive end bearing cap
Terminal box
Internal drive end bearing cap
Drive endshield
Shaft
Drive end bearing
Grease nipple
External drive end bearing cap
Nameplate
Frame
Rotor
Key
Wound Stator
Drain
Seal

W22 Prime

The W22 Prime is part of WEG's global platform for IE4 and IE5 efficiency levels, reinforcing the company's commitment to delivering high-performance induction motor solutions worldwide.

As the evolution of WEG induction motors, W22 Prime is engineered to achieve the highest efficiency classes currently defined by IEC standards, while maintaining the robustness and operational simplicity that characterise squirrel cage induction technology. High efficiency directly translates into lower energy consumption, and consequently, reduced CO_2 emissions, supporting industrial decarbonisation efforts and long-term sustainability goals.

Fully aligned with current regulatory requirements and prepared for future efficiency developments, W22 Prime enables industries to meet today's compliance standards while anticipating tomorrow's performance expectations.

Designed for demanding industrial environments, the W22 Prime delivers higher levels of efficiency together with high reliability, even in heavy-duty applications. Its optimised electromagnetic design and advanced thermal management ensure stable operation, long service life and predictable maintenance performance.

With compatibility for both Direct-On-Line (DOL) and Variable Speed Drive (VSD) operation, W22 Prime integrates seamlessly into existing installations and simplifies system upgrades. Combined with one of the most comprehensive IE5 induction motor ranges on the market, it allows efficiency improvements across multiple power ratings and industrial sectors.

Backed by WEG's engineering expertise and a 36-month warranty, W22 Prime represents a future-ready solution, delivering maximum efficiency, operational confidence and sustainable performance.

W22 Prime						
Coming soon	Released					Coming soon
63 - W225S/M	225S/M	250S/M	W280S/M	280S/M	W315S/M	315S/M - 450

Technical Features

Number of phases	Three-phase
Power range	0.12 kW up to 1000 kW*
Number of poles	2, 4, 6 and 8*
Frame sizes	63 up to 450*
Voltage	Low Voltage
Frequency	50 Hz / 60 Hz
Efficiency level	IE4 and IE5
Thermal class	F (80 K)
Service duty	S1
Ambient temperature	-20 up to 40 °C
Enclosure	TEFC
Degree of protection	IP55
Mounting	B3T
Bearing type	Ball bearings
Grease nipples	Grease nipples for frames 225 to 450

**Full portfolio subject to phased rollout. Please consult WEG for availability details.*

Sustainability and Carbon Emission Reduction Through High Efficiency Motors

The IE5 efficiency level, as defined in IEC 60034-30-1:2025, represents the highest efficiency class currently available for squirrel cage induction motors.

High-efficiency motors are one of the most effective ways to improve the performance of existing applications through direct replacement. While higher efficiency motors may have a higher initial purchase cost compared to lower efficiency alternatives, the acquisition cost of an induction motor typically represents only around 2% of its total cost of ownership.

Over the motor's lifetime, the energy savings delivered by IE4 and IE5 efficiency levels significantly outweigh the initial investment, resulting in measurable reductions in operational costs.

Increasing motor efficiency also directly contributes to lower CO_2 emissions.

By implementing IE4 and IE5 motors, companies demonstrate a clear commitment to energy efficiency, carbon reduction, and long-term sustainability — while simultaneously improving overall operational performance and energy efficiency.

The W22 Prime from WEG offers one of the most complete ranges of IE4 and IE5 induction motors available today. It is designed not only to significantly reduce energy consumption, but also to improve noise and vibration performance, enhance reliability, simplify maintenance, and lower the overall total cost of ownership.

Global presence and efficient solutions contributing to a low-carbon future

WEG solutions stand out for the efficiency and flexibility of their electrical and mechanical design, adapting to the most demanding customer needs across various applications. With a comprehensive product line for the low-carbon hydrogen chain, WEG provides effective solutions.

WEG is **GOLD** in **EcoVadis**

GOLD | Top 5%
ecovadis
Sustainability Rating
OCT 2025

1 VERSIONS AVAILABLE

Meeting the legislative requirements of the European Market, W22 Prime motors are available in two versions in accordance with IEC 60034-30-1:2025: IE4 or IE5 motors.

Efficiency values for W22 Prime motors are prepared in accordance with the test standard IEC 60034-2-1:2024, with stray load losses determined directly by the summation of losses. The output versus frame ratio for all W22 Prime motors follows the EN 50347 standard, thus allowing direct replacement of existing lower efficiency motors with IE4 or IE5 motors. A further characteristic of the W22 Prime electrical design is that it was conceived in such way that its efficiency remains practically constant in the 75% to 100% load range. Therefore, even when the motor is not running at full load its efficiency is not affected (see Figure 1) .

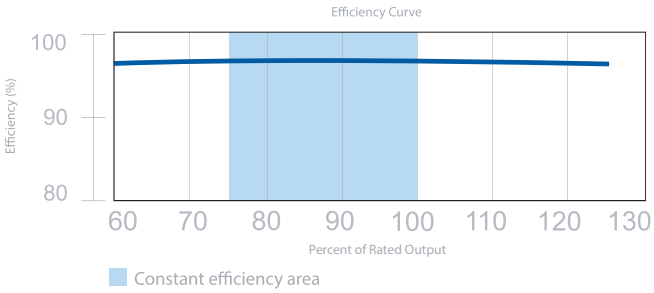

Figure 1. *Typical efficiency curve of W22 Prime line*

2 STANDARDS

W22 Prime motors meet the requirements and regulations of the latest versions of the following International Standards:

IEC 60034-1 Rotating electrical machines - Part 1: Rating and performance.

IEC 60034-2-1 Rotating electrical machines - Part 2-1: Standard methods for determining losses and efficiency from tests (excluding machines for traction vehicles).

IEC 60034-5 Rotating electrical machines - Part 5: Degrees of protection provided by the integral design of rotating electrical machines (IP code) - classification.

IEC 60034-6 Rotating electrical machines - Part 6: Methods of cooling (IC code).

IEC 60034-7 Rotating electrical machines - Part 7: Classification of types of enclosures and mounting arrangements (IM code).

IEC 60034-8 Rotating electrical machines - Part 8: Terminal markings and direction of rotation.

IEC 60034-9 Rotating electrical machines - Part 9: Noise limits.

IEC 60034-11-1 Rotating electrical machines - Part 11-1: Thermal protection.

IEC 60034-12 Rotating electrical machines - Part 12: Starting performance of single-speed three-phase cage induction motors.

IEC 60034-14 Rotating electrical machines - Part 14: Mechanical vibration of certain machines - Limits of vibration.

IEC 60034-30-1 Rotating electrical machines - Part 30: Efficiency classes for single-speed three-phase cage induction motors.

IEC 60072-1 Dimensions and output series for rotating electrical machines - Part 1: Frame numbers 56 to 400 and flange numbers 55 to 1080.

EN 50347 General purpose three-phase induction motors having standard dimensions and outputs - frame numbers 56 to 315 and flange numbers 65 to 740.

3 CONSTRUCTION DETAILS

The information included in this technical catalogue refers to the standard construction features and most common variations for W22 Prime Low Voltage Motors in frame sizes that are available in this moment: from IEC 225S/M to W315S/M. W22 Prime motors for special and/or customized applications are available on request. For more information, please, contact B&P Elektromotoren.

3.1 FRAME

The W22 Prime frame (Figure 2) is manufactured in FC-200 (EN GJL 200) cast iron providing high levels of mechanical strength to cater for the most demanding applications. The cooling fins are designed to minimize the accumulation of liquids and dust on the motor.

Figure 2. *Frame*

The motor feet are completely solid for optimal mechanical strength (Figure 3), allowing easier alignment and installation.

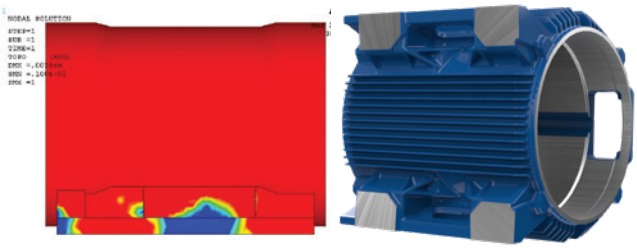

Figure 3. *Solid feet*

3.2 EYEBOLTS

Eyebolts are provided as standard from frame size 225S/M. The positions of the eyebolts are shown in the Table 1:

Table 1. *Eyebolts*

Number of eyebolts	Description
2	Frames 225S/M to W315S/M - Motors with feet and side or top mounted terminal box. These motors have four threaded holes in the upper part of the frame for fastening of the eyebolts (Figure 4).
2	Frames 225S/M to W315S/M - Motors without feet and with C or FF flange. These motors have four threaded holes in the upper part of the frame for fastening of the eyebolts and two more threaded holes in the bottom part

Figure 4. *Motor with four threaded holes for fastening of the eyebolts*

3.3 POINTS FOR VIBRATION MONITORING

To allow easy maintenance, specifically vibration testing, the 225S/M to W315S/M frames are designed with flat areas on both ends for better placement of accelerometers.

These flat areas are provided in both vertical and horizontal planes. As an option M8 threads for SPM accelerometers can be supplied (Figure 5).

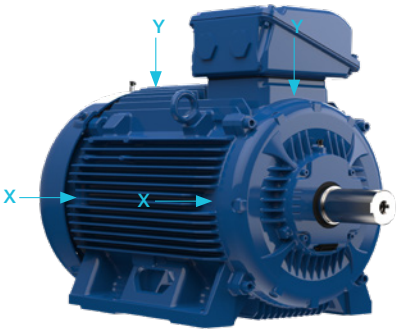

Figure 5.*Flat surfaces for vibration monitoring on the top, front and side.*

3.4 GROUNDING TERMINALS

All frames from 225S/M to W315S/M are provided with an grounding terminal located inside the terminal box (Figure 6). They are also fitted with an grounding terminal on the frame. It is located on the same side of the main terminal box cable entry and is responsible to equalize electrical potential and provide greater safety for operators. Capable of terminating cables from 25 mm² to 185 mm².

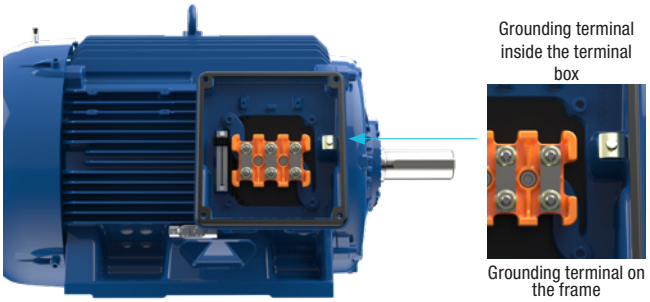

Figure 6.*Grounding terminal inside the terminal box and on the frame*

Optionally, a second external grounding terminal can be provided for motors in frame sizes 225S/M to W315S/M as indicated (Figure 7).

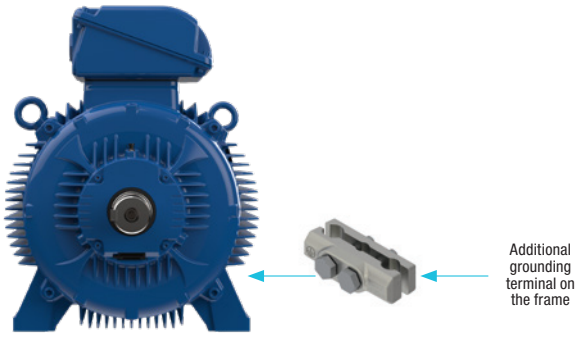

Figure 7. *Additional grounding terminal position on the frame*

3.5 TERMINAL BOX

The terminal box of W22 Prime motors is produced in FC-200 (EN GJL 200) cast iron, which is the same material used for the frame and endshields. It is diagonally split for easier handling of leads and connections. For frame sizes 225S/M to W315S/M the terminal box is positioned towards the drive end of the motor and on top as standard. This arrangement allows improvement of the airflow over the cooling fins, thus reducing motor operating temperatures. Terminal box position on either the left or right hand side of the motor is possible through the use of an adaptor for frame sizes 280S/M and above (Figure 8).

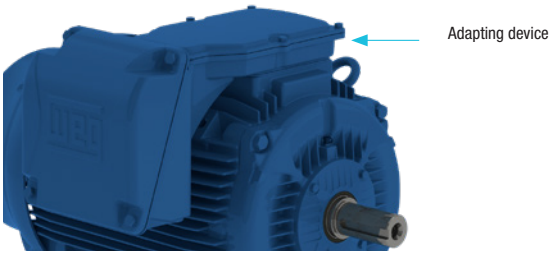

Figure 8. *Terminal box mounted on the left side viewing from drive end shaft.*

Frame sizes 280S/M and above when supplied from the factory with a side mounted terminal box arrangement, this can be positioned on the opposite side simply by rotating the adaptor. Similarly, by removing the adaptor and adjusting the length of the motor leads, the terminal box can be positioned on top of the motor. The flexibility of terminal box positions on the W22 Prime motor offered by the adaptor can be seen in Figure 9.

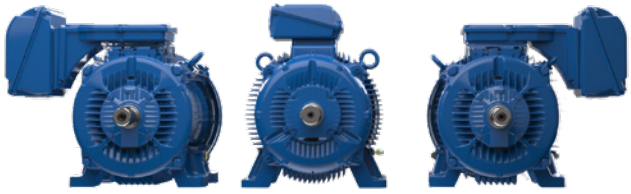

Figure 9. *Terminal box mounted on both sides and on top (versatility).*

Conversely, factory supplied motors with the terminal box position on top can be modified to side mounting by fitting the adaptor and extending the motor leads.

Note!
For all terminal box position modifications please contact B&P Elektromotoren.

As an option, the gland plates can be supplied undrilled. Motors are supplied with plastic threaded plugs in the cable entries for protection against ingress of solid objects during transport. In order to guarantee the degree of protection, cable glands must comply with at least the same degree of protection as that indicated on the motor nameplate. Lack of compliance with such detail can invalidate the motor warranty. If required, please contact B&P Elektromotoren.

3.6 POWER SUPPLY CONNECTION LEADS

Motor power supply leads are marked in accordance with IEC 60034-8 and are connected to a terminal block made from a polyester based resin BMC (Bulk Moulding Compound), duly reinforced with fibre glass (Figure 9).

Figure 10. *BMC terminal block*

3.7 ACCESSORY CONNECTION LEADS

Accessory terminals are assembled onto connectors whenever the motor is supplied with a terminal block. They may be assembled inside the main power terminal box or in a separate accessory terminal box (Figure 11). Whether the accessory terminals are assembled inside the main power or a separate terminal box, an M20x1,5 threaded hole is provided for fitting of cable glands for the incoming connection leads. In the Terminal Box Drawings Section of this technical catalogue it is possible to check the permissible number of connectors which may be assembled inside the main power and accessory terminal boxes.

Figure 11. *Accessory terminal box attached to power terminal box.*

For all frame sizes, there is also the option of providing a dedicated terminal box for the connection of space heaters, or two separate accessory terminal boxes, as shown in the Figure 12.

Figure 12. *Two accessory terminal boxes attached to power terminal box*

3.8 ENDSHIELDS

The drive end shield is designed with fins for improved thermal heat dissipation, to ensure lower bearing operating temperatures, resulting in extended lubrication intervals. For the frames 225S/M to W315S/M, where ventilation is critical for thermal performance of the motor, the endshield fastening screws are located in such a way so as not to obstruct the airflow across any cooling fin, thus contributing to better thermal exchange.

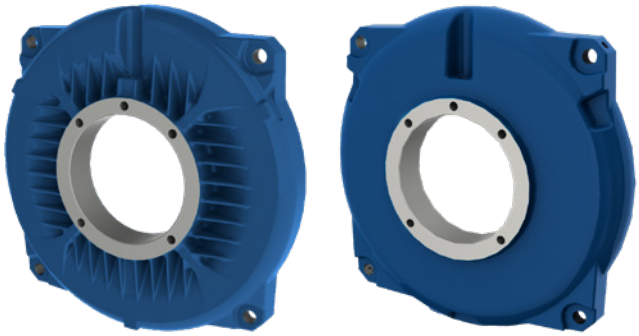

Figure 13. Drive and non-drive endshields

3.9 DRAINS

W22 Prime has automatic drain plugs with degree of protection IP56 (Figure 14) which do not require human intervention to open the plug and avoid accumulation of condensed liquids into the motor.

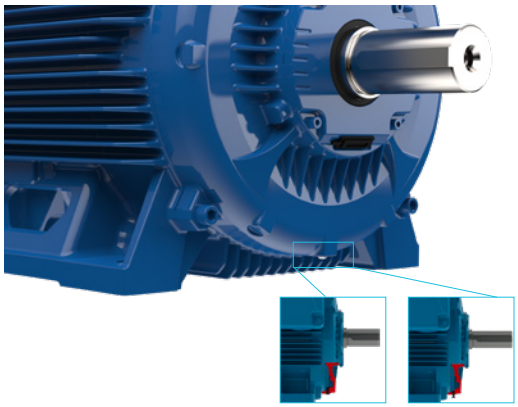

Figure 14. Detail of the drain plug position on drive endshield.

3.10 FAN COVER

The fan cover is made cast iron. It has an aerodynamic design, which results in a significant reduction in noise level and optimized airflow between frame fins for heat exchange improvement. Figure 15 shows the aerodynamic design of the cast iron fan cover.

Figure 15.Fan cover

3.11 NAMEPLATE

The nameplate details information relating to the construction and performance characteristics of the motor. It is also necessary to indicate on the nameplate the IE code and nominal efficiency of the motor at full load (and 3/4 and 1/2 load where space permits), as required by IEC 60034-30-1.

Figure 16. Nameplate position of W22 Prime motors

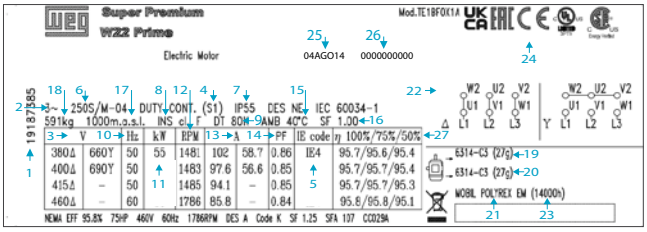

Figure 17.Nameplate layout

1	Motor code	2	Number of phases
3	Rated operating voltage	4	Service duty
5	Efficiency Code - IE	6	Frame size
7	Degree of protection	8	Insulation class
9	Temperature rise	10	Frequency
11	Motor rated power	12	Full load speed (rpm)
13	Rated operating current	14	Power factor
15	Ambient temperature	16	Service factor
17	Altitude	18	Motor weight
19	Drive end bearing type and amount of grease (where applicable)	20	Non-drive end bearing type and amount of grease (where applicable)
21	Type of grease for bearings	22	Connection diagram
23	Relubrication intervals in hours	24	Certification labels
25	Manufacturing date	26	Serial number
27	Partial load efficiency		

4 COOLING SYSTEM AND NOISE LEVEL / VIBRATION LEVEL / IMPACT RESISTANCE

4.1 COOLING SYSTEM

The W22 Prime standard motors are totally enclosed fan cooled (TEFC - IC 411), as per IEC 60034-6 (Figure 18). Air over (TEAO - IC 418) is available on request.

Figure 18.Cooling system

The cooling system (fan, non drive endshield and fan cover) is designed to minimize the noise level and improve thermal efficiency (Figure 19).

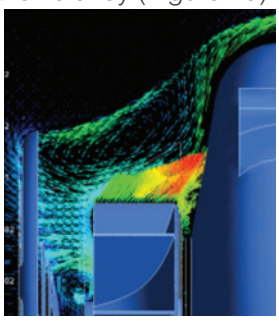

Figure 19. Cooling system operation

4.2 NOISE LEVEL

W22 Prime motors comply with IEC 60034-9 Standard and the corresponding sound pressure levels. Table 2 and Table 3 show sound pressure levels in dB(A) which are obtained upon tests at 50 Hz and 60 Hz.

***Table 2.** Sound pressure levels for 50 Hz motors*

IEC 50 Hz		
Frame	Sound pressure level dB(A) at 1 meter	
	2 poles	4 poles
225S/M	74	64
250S/M	74	64
W280S/M	74	64
280S/M	77	71
W315S/M	77	71

***Table 3.** Sound pressure levels for 60 Hz motors*

IEC 60 Hz		
Frame	Sound pressure level dB(A) at 1 meter	
	2 poles	4 poles
225S/M	79	67
250S/M	79	68
W280S/M	79	68
280S/M	81	75
W315S/M	81	75

The noise level values shown in Table 2 and Table 3 are taken at 1 metre at no load. Under load the IEC 60034-9 Standard foresees an increase of the sound pressure levels as shown Table 4.

***Table 4.** Maximum expected increase of sound pressure level for loaded motors.*

Frame (mm)	2 poles	4 poles	6 poles	8 poles
225 ≤ H ≤ 280	2	3	6	7
H = 315	2	3	5	6

Note!
These values refer to operating frequencies of 50 Hz and 60 Hz.
The overall noise level can be reduced by up to 2 dB (A) with the installation of a drip cover.

4.3 VIBRATION LEVEL

Vibration of an electrical machine is closely related to its assembly on the application and, thus, it is generally desirable to perform vibration measurements under installation and operational conditions. However, to allow evaluation of the vibration generated by the electrical machine itself in a way to allow reproducibility of the tests and the obtaining of comparative measurements, it is necessary to perform such measurements with the machine uncoupled, under controlled test conditions. The test conditions and vibration limits described here are those found in IEC 60034-14. The severity of vibration is the maximum value of vibration found among all the recommended measurement points and directions. Table below, indicates the recommended admissible values of vibration severity under IEC standard 60034-14, for degrees of vibration A and B.

W22 Prime motors are dynamically balanced with half key and the standard version meets the vibration levels of Grade A (without special vibration requirements) described in IEC 60034-14 Standard. As an option, motors can be supplied in conformance with vibration of Grade B. The RMS speed and vibration levels in mm/s of Grades A and B are shown in Table 5.

***Table 5.** Speed and vibration levels*

Vibration	Frame	225 < H ≤ 280	H > 280
	Assembly	Vibration speed RMS (mm/s)	Vibration speed RMS (mm/s)
Grade A	Free suspension	2,2	2,8
Grade B	Free suspension	1,1	1,8

4.4 IMPACT RESISTANCE

The W22 Prime motor complies with impact level IK08 (mechanical impact of 5J) as defined in EN 62262:2002 - Degrees of protection provided by enclosures for electrical equipment against external mechanical impacts (IK code) - therefore ensuring superior mechanical strength for the most demanding applications.

5 SHAFT / BEARINGS

5.1 SHAFT

The shaft steel material for W22 Prime standard

motors is AISI 1040/45, in frames IEC 225S/M to W315S/M. When supplied with roller bearings, the shaft material must be AISI 4140. Information regarding the maximum allowable radial and axial loads on shaft ends is given in Table 7 to Table 10. Important: when equipped with a roller bearing, it is necessary to lock the non-drive end bearing which obliges replacement of the non-drive end bearing cap.

Shafts of W22 Prime motors are supplied with an open profile keyway, with a threaded centre hole, and can optionally be provided with a second shaft end. Dimensions of motor shafts can be found in Section 18 - Mechanical Data. For highly corrosive environments, W22 Prime motors may also be supplied with AISI 316 or AISI 420 stainless steel shafts.

Note!
The 2 poles motors will only be available with AISI 316 stainless steel shaft ends.

5.2 BEARINGS

W22 Prime motors are supplied with deep groove ball bearings as standard. Optionally, for frame sizes 225 and above, NU series roller bearings can be fitted to motors intended for heavy duty applications where high radial loads may occur e.g. pulley and belt drives.

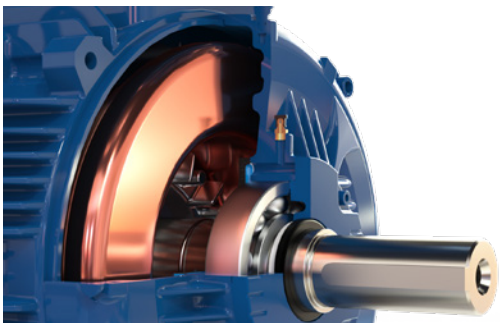

Figure 20. *Ball bearing view*

The nominal bearing life L10h is 20.000 or 40.000 hours in conformance with maximum radial and axial loads as described in tables 8, 9 and 10. When direct coupled to the load (without axial or radial thrusts), the L10h bearing life can be extended to 50.000* hours.

** For regreasable motors. Other configurations contact* B&P.

In standard configuration, with ball bearings, the drive end bearing is locked axially from frame 225 and above. To compensate for any axial movement the motors are fitted with pre-load springs. When provided with roller bearings, the non-drive end bearing is locked and the axial movement is compensated by the axial play of the front roller bearing. Minimum and maximum admissible radial loads for roller bearings are shown.

The lifetime of the bearing is dependent on its type and size, the radial and axial mechanical loads it is submitted to, operating conditions (environment, temperature, mounting orientation), rotational speed and grease life. Therefore, bearing lifetime is closely related to its correct use, maintenance and lubrication. Respecting the quantity of grease and lubrication intervals allows bearings to reach the indicated lifetime. W22 Prime motors in IEC frames W225S/M and above are provided as standard with grease fittings in each endshield to permit the relubrication of the bearings. The quantity of grease and lubrication intervals are stamped on the motor nameplate. The lubrication intervals are shown in Table 11 and Table 12. It must be emphasized that excessive lubrication, i.e. a quantity of grease greater than that recommended on the motor nameplate, can result in the increase of bearing temperatures leading to reduced operating hours.

Note:

1. L10h lifetime means that at least 90% of the bearings submitted to the maximum indicated loads will reach the number of hours indicated. The maximum admissible radial and axial loads for the standard configuration are shown in Table 8, to Table 10. The values of the maximum radial load consider axial load as nil. The values of the maximum axial load consider radial load as nil. For bearing lifetimes with combined axial and radial loads condition contact B&P.
2. The radial force value Fr usually results from information recommended in the catalogues of pulley / belt manufacturers.

When this information is not available, the force Fr, under operation, can be calculated based on the output power, on coupling design characteristics with pulleys and belts and on the type of application. So we have:

$$Fr = \frac{19{,}1 \times 10^6 \times P_n}{n_n \times dp} \times ka \text{ (N)}$$

Where:

Fr is the radial force caused by pulley and belt coupling [N];
Pn is the motor rated power [kW];
nn is the motor rated speed per minute [rpm];
dp is the pitch diameter of the drive pulley [mm];
ka is a factor that depends on belt tension and type of application.

Table 6. *ka factor*

	Groups and basic types of application	ka factor of the application	
		V belts	Plane belts
1	Fans and blowers, centrifugal pumps, winding machines, compressors, machine tools with outputs up to 22 kW (30 HP)	2,0	3,1
2	Fans and blowers, centrifugal pumps, winding machines, compressors, machine tools with outputs higher than 22 kW (30 HP)	2,4	3,3

	Groups and basic types of application	ka factor of the application	
		V belts	Plane belts
3	Presses, vibrating screens, piston and screw compressors, pulverisers, helicoidal conveyors, woodworking machines, textile machines, kneading machines, ceramic machines, pulp and paper industrial grinders (for all power range).	2,7	3,4
4	Overhead cranes, hammer mills, metal laminators, conveyors, gyratory crushers, jaw crushers, cone crushers, cage mills, ball mills, rubber mixers, mining machines, shredders (for all power range).	3,0	3,7

Important:

1 - Special applications

Motor operation under adverse operating conditions, such as higher ambient temperatures and altitudes or abnormal axial / radial loads, may require specific lubrication measures and alternative relubrication intervals to those indicated in the tables provided within this technical catalogue.

2 - Roller bearings

Roller bearings require a minimum radial load so as to ensure correct operation. They are not recommended for direct coupling arrangements, or for use on 2 pole motors.

3 - Frequency inverter driven motors

Bearing life may be reduced when a motor is driven by a frequency drive at speeds above nominal. Speed itself is one of the factors taken into consideration when determining motor bearing life.

4 - Motors with modified mounting configurations

For motors supplied with horizontal mounting but working vertically, lubrication intervals must be reduced by half.

5 - Figures for radial thrusts

The figures given in the tables below for radial thrusts take into consideration the point upon which the load is applied, either at the centre of the shaft (L/2) or at the end of the shaft (L).

Note!

On motors with second shaft end, refer to WEG for details of the maximum permissible axial and radial loads.

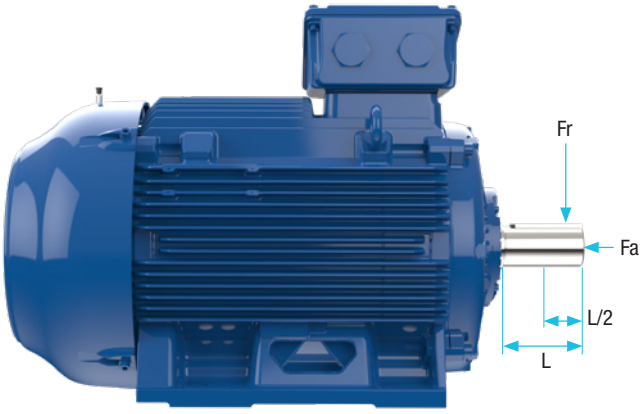

Figure 21. *Radial and axial thrust on motor shaft*

5.3 PERMISSIBLE LOADS

Radial Thrust - Ball Bearings

Table 7. *Maximum permissible radial thrusts for ball bearings (horizontal mounting)*

Maximum permissible radial thrust - 50 Hz - Fr in (kN)					
Frame	Poles	20.000 hours		40.000 hours	
		Horizontal		Horizontal	
		L	L/2	L	L/2
225S/M	2	5,2	5,6	4,0	4,4
	4	6,2	6,8	4,8	5,3
	6	6,7	7,8	5,5	6,0
	8	6,7	8,7	6,1	6,7
250S/M	2	5,0	5,5	3,9	4,2
	4	6,1	6,7	4,7	5,1
	6	7,0	7,6	5,3	5,8
	8	5,2	6,2	5,4	5,9
W280S/M	2	4,8	5,2	3,7	4,0
	4	7,1	7,7	5,4	5,9
	6	6,5	7,1	6,2	6,7
	8	4,8	5,2	4,5	4,9
280S/M	2	4,7	5,1	3,5	3,8
	4	6,9	7,5	5,1	5,6
	6	7,8	8,5	5,8	6,3
	8	7,9	8,6	6,6	7,2
W315S/M	2	2,2	4,4	2,2	3,5
	4	8,2	8,9	6,1	6,6
	6	7,6	9,0	6,8	7,4
	8	4,0	4,8	4,0	4,4

Radial Thrust - Roller Bearings

Table 8. *Maximum permissible radial thrusts for roller bearings (horizontal mounting)*

Maximum permissible radial thrust - 50 Hz - Fr in (kN)					
Frame	Poles	20.000 hours		40.000 hours	
		Horizontal		Horizontal	
		L	L/2	L	L/2
225S/M	4	9,1	15,6	9,1	15,6
	6	8,2	14,0	8,2	14,0
	8	8,2	14,0	8,2	14,0
250S/M	4	9,7	15,2	9,7	15,2
	6	7,1	11,2	7,1	11,2
	8	5,5	8,6	5,5	8,6
W280S/M	4	9,5	13,8	9,5	13,8
	6	6,6	9,6	6,6	9,6
	8	4,8	7,0	4,8	7,0
280S/M	4	14,1	22,7	14,1	19,4
	6	10,3	16,7	10,3	16,0
	8	6,5	10,5	6,5	10,5
W315S/M	4	8,8	17,6	8,8	14,9
	6	7,8	15,7	7,8	15,0
	8	4,2	8,5	4,2	8,5

The values given for roller bearings consider AISI 4140 steel shafts.

Axial Thrust - Ball Bearings

Table 9. *Maximum pemissible axial thrusts for ball bearings*

Maximum permissible axial thrust - 50Hz Fa in (kN) - 20.000 hours							
Frame	Poles	Horizontal		Vertical with shaft downwards		Vertical with shaft upwards	
		Pulling	Pushing	Pulling	Pushing	Pulling	Pushing
225S/M	2	3,1	5,2	2,4	6,3	4,2	4,5
	4	4,6	6,7	3,7	8,2	6,1	5,8
	6	5,7	7,8	4,6	9,5	7,4	6,7
	8	6,6	8,7	5,6	10,4	8,3	7,7
250S/M	2	3,1	5,2	2,2	6,5	4,4	4,3
	4	4,4	6,6	3,2	8,6	6,5	5,3
	6	5,5	7,6	4,0	10,0	7,9	6,1
	8	6,4	8,5	4,9	11,0	8,9	7,1
W280S/M	2	3,0	5,2	2,2	6,6	4,4	4,3
	4	5,3	7,4	4,0	9,5	7,4	6,2
	6	6,5	8,6	5,0	11,1	9,0	7,1
	8	7,6	9,7	6,1	12,2	10,1	8,2
280S/M	2	2,8	4,9	1,1	7,5	5,4	3,2
	4	4,7	7,2	2,6	10,7	8,3	5,0
	6	5,9	8,3	3,3	12,6	10,2	5,7
	8	7,0	9,4	4,4	13,7	11,3	6,8
W315S/M	2	2,7	4,8	0,4	8,2	6,1	2,5
	4	5,8	8,2	3,0	12,7	10,3	5,4
	6	7,0	9,4	3,5	15,3	12,9	5,9
	8	8,3	10,7	4,6	16,8	14,4	7,0

Axial Thrust - Ball Bearings

Table 10. *Maximum permissible axial thrusts for ball bearings*

Maximum permissible axial thrust - 50Hz Fa in (kN) - 40.000 hours							
Frame	Poles	Horizontal		Vertical with shaft downwards		Vertical with shaft upwards	
		Pulling	Pushing	Pulling	Pushing	Pulling	Pushing
225S/M	2	1,9	4,1	1,3	5,2	3,0	3,4
	4	3,0	5,1	2,1	6,6	4,4	4,2
	6	3,8	5,9	2,8	7,6	5,5	4,9
	8	4,5	6,6	3,5	8,3	6,2	5,6
250S/M	2	1,9	4,0	1,0	5,4	3,3	3,1
	4	2,9	5,0	1,6	7,0	4,8	3,7
	6	3,6	5,7	2,2	8,1	6,0	4,3
	8	4,3	6,5	2,8	8,9	6,8	4,9
W280S/M	2	1,9	4,0	1,0	5,4	3,3	3,1
	4	3,5	5,6	2,2	7,6	5,5	4,3
	6	4,4	6,5	2,9	8,9	6,8	5,0
	8	5,2	7,3	3,7	9,8	7,7	5,8
280S/M	2	1,6	3,8	0,0	6,4	4,3	2,1
	4	3,0	5,4	0,8	8,9	6,5	3,2
	6	3,8	6,2	1,1	10,4	8,0	3,5
	8	4,6	7,0	2,0	11,3	8,9	4,4
W315S/M	2	1,5	3,6	0,0	7,0	4,9	1,3
	4	3,7	6,1	0,8	10,6	8,2	3,2
	6	4,6	7,0	0,9	12,8	10,4	3,3
	8	5,5	7,9	1,7	13,9	11,5	4,1

Lubrication Intervals (Ambient ≤ 40°C at Rated Speed)

Table 11. *Lubrication intervals for ball bearings (horizontal mounting).*

Lubrication intervals (hours)					
Frame	Poles	DE Bearing	NDE bearing	50 Hz	60 Hz
225S/M	2	6314	6314	6600	4400
	4	6314	6314	13200	13200
	6	6314	6314	13200	13200
	8	6314	6314	13200	13200
250S/M	2	6314	6314	6600	4400
	4	6314	6314	13200	13200
	6	6314	6314	13200	13200
	8	6314	6314	13200	13200
W280S/M	2	6314	6314	6600	4400
	4	6316	6314	8800	8800
	6	6316	6314	13200	13200
	8	6316	6314	13200	13200
280S/M	2	6314	6314	6600	4400
	4	6316	6316	8800	8800
	6	6316	6316	13200	13200
	8	6316	6316	13200	13200

W315S/M	2	6314	6314	6600	4400
	4	6319	6314	8800	8800
	6	6319	6314	13200	8800
	8	6319	6314	13200	13200

Table 12. *Lubrication intervals for roller bearings (horizontal mounting).*

Lubrication intervals (hours)					
Frame	Poles	DE Bearing	NDE bearing	50 Hz	60 Hz
225S/M	2	NU-314	6314	4400	3000
	4	NU-314	6314	8800	8800
	6	NU-314	6314	13200	8800
	8	NU-314	6314	13200	13200
250S/M	2	NU-314	6314	4400	3000
	4	NU-314	6314	8800	8800
	6	NU-314	6314	13200	8800
	8	NU-314	6314	13200	13200
W280S/M	2	NU-314	6314	4400	3000
	4	NU-316	6314	8800	6600
	6	NU-316	6314	8800	8800
	8	NU-316	6314	8800	8800
280S/M	2	NU-314	6314	4400	3000
	4	NU-316	6316	8800	6600
	6	NU-316	6316	8800	8800
	8	NU-316	6316	8800	8800
W315S/M	2	NU-314	6314	4400	3000
	4	NU-319	6314	6600	6600
	6	NU-319	6314	8800	8800
	8	NU-319	6314	8800	8800

Note!
The amount of grease is indicated on the nameplate.

5.3.1 Bearing Monitoring

W22 Prime motors can, on request, be equipped with bearing temperature detectors to provide continuous monitoring of bearing operating conditions, most commonly used is the Pt-100 temperature detector. This type of monitoring is extremely important considering that it directly affects the grease and bearing lives particularly on motors equipped with regreasing facilities.

6 MOUNTING

Motors are supplied, as standard, in the B3T foot configuration, with the terminal box on top.

Figure 22.*B3T mounting*

The mounting configuration for the W22 Prime motor lines comply with IEC 60034-7 standard. Standard mounting forms and their variations are shown in table 15. After the designation, a characteristic letter is used to define the terminal box position. So, the mounting code IM B3 can be seen in WEG documents as detailed below (without IM code).

B3L - terminal box on left hand side of the motor frame

B3T - terminal box on top of the motor frame

B3R - terminal box on right hand side of the motor frame

Note!
The terminal box position is defined viewing the motor from the shaft end. Mounting forms and their variations are indicated inTable 13.

Table 13. *Mountings configurations*

Basic mountings	Other type of mounting				
IM B3	IM V5	IM V6	IM B6	IM B7	IM B8
IM 1001	IM 1011	IM 1031	IM 1051	IM 1061	IM 1071
IM B35	IM V15	IM V35	- *)	- *)	- *)
IM 2001	IM 2011	IM 2031	IM 2051	IM 2061	IM 2071
IM B34	IM V17	IM V37	- *)	- *)	- *)
IM 2101	IM 2111	IM 2131	IM 2151	IM 2161	IM 2171
IM B5	IM V1	IM V3	IM B30		
IM 3001	IM 3011	IM 3031			
IM B14	IM V18	IM V19			
IM 3601	IM 3611	IM 3631			

** Non-defined mountings by IEC 60034-7.*

Important:

1. For motors mounted vertically shaft down fitting of

a drip cover / impact canopy is recommended to prevent ingress of small objects into the fan cover. The increase in total length of the motor with drip cover / impact canopy is shown.

2. For motors mounted vertically with shaft up and installed in environments containing liquids, the use of a rubber slinger is recommended to prevent the ingress of liquid into the motor through the shaft.

7 DEGREE OF PROTECTION / SEALING SYSTEM / PAINTING

7.1 DEGREE OF PROTECTION

As per IEC 60034-5, the degree of protection of a rotating electrical machine consists of the letters IP (ingress protection), followed by two characteristic numerals, with the following definitions:

a) First characteristic numeral: refers to protection of persons against or approach to live parts and against contacts with moving parts (other than smooth rotating shafts and the like) inside the enclosure and protection of the machine against ingress of solid and foreign objects.

b) Second characteristic numeral: protection of machines against harmful effects due to ingress of water.

As standard, W22 Prime motors have the degree of protection IP55. According to IEC 60034-5, this defines the degree of protection as follows:

a) First characteristic numeral 5: machine protected against dust. The enclosure is protected against contact with moving parts. Ingress of dust is not totally prevented, but dust does not enter in sufficient quantity to interfere with satisfactory operation of the machine.

b)Second characteristic numeral 5: Machine protected against water jets. Water projected by a nozzle against the machine from any direction shall have no harmful effect.

7.2 SEALING SYSTEM

For frames 225S/M to W315S/M shaft sealing is provided using the exclusive WSeal®, which consists of a double lipped V-Ring with a metallic cap (see Figure 23). This configuration operates like a labyrinth preventing ingress of water and dust into the motor.

Figure 23. *WSeal®*

This sealing system protects the motor against the ingress of dust and water into the frame present in the environment.

Alternatively, W22 Prime motors are available with other sealing arrangements, for example, oilseal, taconite labyrinth and the WEG exclusive W3 Seal®. When fitted with a flange, the recommended seal is either a lip seal (no contact with liquid) or oilseal (direct contact with liquid).

7.3 PAINTING

Figure 24. *WEG painting plan*

The standard painting plans utilized on W22 Prime motors meet the atmospheric corrosive category “C3” as indicated in the DIN EN ISO 12944-2 standard.

They are designed for use on motors installed in normal environments, slightly severe, sheltered or non-sheltered, for industrial use, with low relative humidity, normal temperature variations and the presence of SO2.

W22 Prime motors utilise the WEG internal paint plan 203A (semi-gloss):

Primer: One coat of red oxide, alkyd based primer, with minimum dry coat thickness of 20 mm.

Finishing: One coat of alkyd based synthetic enamel paint, with minimum dry coat thickness of 60mm.

Note!
These painting plans are not recommended for direct exposure to acid steam, alkalis, solvents and salty environments.

Alternative painting plans are available on request, which are suitable to guarantee additional protection in aggressive environments, either protected or unprotected.For painting over the WEG original painting, please make sure with your paint supplier that the new painting system is compatible with the base paint used in WEG motors and that the surfaces are prepared accordingly, otherwise it can affect the performance of the paint plan and void the product warranty.

7.3.1 Tropicalized Painting

The integrity of the insulation system is the primary consideration when determining the lifetime of an electric motor. High humidity can result in premature deterioration of the insulation system, therefore for any ambient temperature with relative humidity above 95%, it is recommended to coat all internal components of the motor with an epoxy painting, also known as tropicalization.

8 VOLTAGE / FREQUENCY

As defined in IEC 60034-1 the combination of voltage and frequency variations are classified as Zone A or Zone B, as per Figure 25.

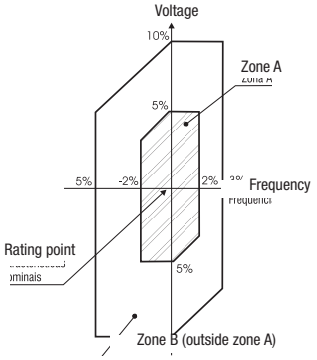

Figure 25. *Rated voltage and frequency limits for electric motors*

IEC 60034-1 states that the motor must be suitable to perform its main function (supply torque) continuously within Zone A. However, this motor may not fully meet its performance characteristics due to power supply voltage and frequency variation, which can result in temperature rise above the rated value.

The motor must also be suitable to perform its main function (supply torque) at Zone B. However, the performance characteristic changes will be greater than those operating in Zone A.

The temperature rise will also be higher than that at rated voltage and frequency and when operating within Zone A. Prolonged operation near the boundaries of Zone B is not recommended.

9 OVERLOAD CAPACITY

As per IEC 60034-1, motors having rated output not exceeding 315 kW and rated voltages not exceeding 1 kV shall be capable of withstanding a current equal to 1,5 times the rated current for not less than 2 minutes.

10 AMBIENT AND ALTITUDE

Unless otherwise specified, the rated outputs shown in the electrical data tables within this catalogue refer to continuous duty operation S1, as per IEC 60034-1 and under the following conditions:

- ambient temperature range -20 °C to +40 °C
- altitudes up to 1000 metres above sea level

For operating temperatures and altitudes differing from those above, the factors indicated in table 16 must be applied to the nominal motor power rating in order to determine the derated output (Pmax).

Pmax = Pnom x correction factor

Table 14. *Correction factors for altitude and ambient temperature*

T (°C)	Altitude (m)								
	1000	1500	2000	2500	3000	3500	4000	4500	5000
10							0,97	0,92	0,88
15						0,98	0,94	0,90	0,86
20					1,00	0,95	0,91	0,87	0,83
25				1,00	0,95	0,93	0,89	0,85	0,81
30			1,00	0,96	0,92	0,90	0,86	0,82	0,78
35		1,00	0,95	0,93	0,90	0,88	0,84	0,80	0,75
40	1,00	0,97	0,94	0,90	0,86	0,82	0,80	0,76	0,71
45	0,95	0,92	0,90	0,88	0,85	0,81	0,78	0,74	0,69
50	0,92	0,90	0,87	0,85	0,82	0,80	0,77	0,72	0,67
55	0,88	0,85	0,83	0,81	0,78	0,76	0,73	0,70	0,65
60	0,83	0,82	0,80	0,77	0,75	0,73	0,70	0,67	0,62
65	0,79	0,76	0,74	0,72	0,70	0,68	0,66	0,62	0,58
70	0,74	0,71	0,69	0,67	0,66	0,64	0,62	0,58	0,53
75	0,70	0,68	0,66	0,64	0,62	0,60	0,58	0,53	0,49
80	0,65	0,64	0,62	0,60	0,58	0,56	0,55	0,48	0,44

11 INSULATION & TEMPERATURE RISE

W22 Prime motors are supplied with class F insulation and Class B (80 K) temperature rise at normal operating conditions (unless otherwise specified).

The difference between the temperature of the class F insulation (105 K) and the temperature rise of the design (80 K) means that, in practice, W22 Prime motors are suitable to deliver outputs above the rated values up to a limit where the temperature rise reaches the temperature rise value of the insulation class.

The ratio between temperature rise and service factor is given by the equation below:

$$DT_{FINAL}\ SF^2 \times DT_{FINAL}$$

From the above calculation, we can conclude that the service factor is approximately 1.15. This reserve of temperature permits W22 Prime motors with class B temperature rise (80 K) to operate continuously under the following conditions:

- Up to 15% above their rated output, considering 40 °C ambient temperature and 1000 m.a.s.l. or;
- At ambient temperatures up to 55°C or altitudes up to 3000 m.a.s.l. maintaining their nominal rated output.

Important: Please note that under these conditions the combined ambient and temperature rise may reach class F limits.

Table 14 shows the safety margins per thermal class.

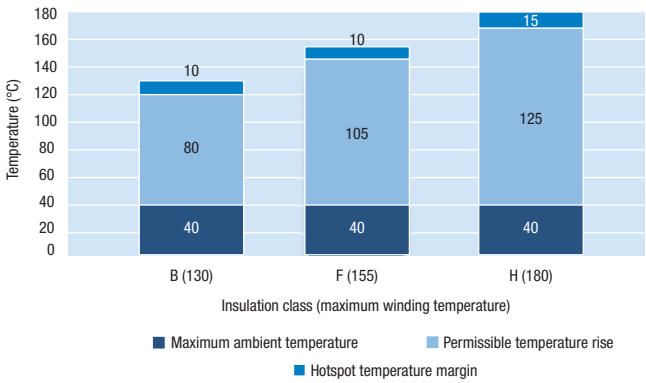

Figure 26. *Safety margins per thermal class.*

Bearing lubrication intervals will change under operating

conditions other than 40 °C maximum ambient temperature and 1000 metres above sea level. Contact B&P for further information.

All W22 Prime motors are wound with the WISE® insulation system which consists of enamelled wire impregnated with solvent free resin which protects motors at temperatures up to 200 °C. The WISE® system also permits motor operation with variable speed drives.

11.1 SPACE HEATERS

The use of space heaters is recommended in two situations:

- Motors installed in environments with relative air humidity up to 95%, in which the motor may remain idle for periods greater than 24 hours;
- Motors installed in environments with relative air humidity greater than 95%, regardless of the operating schedule. It should be highligthed that in this situation it is strongly recommended that an epoxy painting, more commonly known as tropicalization, is applied to the internal components of the motor. More information can be found.

The supply voltage for space heaters must be defined by the Customer.

For all frame sizes, W22 Prime motors can be provided with space heaters suitable for 110-127 V, 220-240 V and 380-480 V. As an option, dual voltage heaters of 110-127 / 220-240 V can be supplied through reconnection of the heater cables inside the terminal box.

The power rating and number of space heaters fitted depends on the size of the motor as indicated in table a below :

Table 15. *Power and quantity of space heaters*

Frame	Quantities	Total power rated (W)
225 and 250	2	56
280 and 315	2	140

11.2 MOTOR PROTECTIONS

Protections available for the W22 Prime motor line can be classified as follows:

- Based on operating temperature
- Based on operating current

Refer to section 15 for further details of the standard and optional protection types available for W22 Prime motors.

Protection Based on Operating Temperature

Continuous duty motors must be protected from overload either by a device integrated into the motor or via an independent protection system, usually a thermal relay with rated or setting current, equal to or below the value obtained when multiplying the power supply rated current (In), as per table a below:

Table 16. *Relay setting current referred to service factor*

Service factor	Relay setting current
1,0 up to 1,15	In x S.F.
≥ 1,15	(In x S.F.) - 5%

11.2.1 Pt-100

Figure 27. *Pt-100*

These are temperature detectors with operating principle based on the properties that some materials vary the electric resistance with the variation in temperature (usually platinum, nickel or copper). They are also fitted with calibrated resistances that vary linearly with temperature, allowing continuous reading of motor operating temperature through a monitoring display, with high precision rate and response sensitivity.

The same detector can serve as alarm (with operation above the regular operating temperature) and trip (usually set up for the maximum temperature of the insulation class).

11.2.2 Thermistor (PTC)

Figure 28. *Thermistor (PTC)*

A thermistor is a non-linear resistance temperature detector, made from semi-conductor material. Each specific thermistor has its own unique resistance vs. temperature characteristic i.e. they have one pre-set, non-adjustable tripping point.

PTC (positive temperature coefficient) thermistors have a resistance that increases dramatically at its defined tripping temperature. This sudden variation in resistance blocks the PTC current which causes the output relay to operate and the main circuit to switch off.

Thermistors are compact, do not wear, and feature faster response times when compared to other types of thermal protectors, although they do not allow continuous monitoring of motor operating temperature.

Together with their electronic circuits, these thermistors provide full protection against overheating caused by overload, under or overvoltage or frequent reversing operations.

Where thermistor protection is required to provide both alarm and trip operation, it is necessary for each phase of the motor winding to be equipped with two sets of appropriately rated thermistors.

WEG Automation offers a range of electronic relays 'RPW' intended specifically to read the PTC signal and operate its output relay.

11.2.3 Bimetallic Thermal Protectors

These are silver-contact thermal sensors, normally closed, that operate at certain temperature rise. When their operating temperature decreases, they return to

their original position instantaneously, allowing the silver contact to close again.

The bimetallic thermal protectors are series-connected with the contactor coil, and can be used either as alarm or trip.

There are also other types of thermal protectors such as Pt-1000, KTY and thermocouples. Contact B&P for further information.

11.3 PROTECTION BASED ON OPERATING CURRENT

Overloads are processes which usually see the temperature increase gradually. To overcome this problem, the thermal protectors described in item 11.2 are quite suitable. However, the only way to protect motors against short-circuit currents is the application of fuses. This type of protection depends directly on the motor current and is highly effective in cases of locked rotor. WEG Automation supplies a range of fuses in versions D and NH.

12 VARIABLE SPEED DRIVE APPLICATION

12.1 CONSIDERATIONS REGARDING VOLTAGE SPIKES AND THE INSULATION SYSTEM

The stator windings of W22 Prime motors are wound with class F insulation (class H optional) and are suitable for either DOL starting or via a variable speed drive. They incorporate the WEG exclusive insulation system - WISE® (WEG Insulation System Evolution) - which ensures superior electrical insulation characteristics. The stator winding is suitable for variable speed drive application, taking into account the limits shown in Table 17.

Table 17. *Supportability of random wound motors' insulation system.*

Motor rated voltage	Voltage Spikes 1)	*dV/dt* 2)	Rise time 2)	Time between pulses
	At motor terminals (phase-phase)	At motor terminals (phase-phase)		
$V_{rated} < 460$ V	≤ 1600 V	≤ 5200 V/µs	≥ 0,1 µs	≥ 6 µs
460 V ≤ V_{rated} < 575 V	≤ 1800 V	≤ 6500 V/µs		
575 V ≤ V_{rated} ≤ 1000 V	≤ 2200 V	≤ 7800 V/µs		

1) Peak voltage in the case of unipolar pulses. Peak-to-peak voltage in the case of bipolar pulses.

2) dV/dt and Rise time definition according to Nema Std. MG1 - Part 30.

Notes:

1 - If one or more of the above conditions is not respected, a filter (load reactor or dV/dt filter) must be installed in the output of the VSD.

2 - W22 Prime motors with rated voltage greater than 575 V, which at the time of purchase did not have any indication of operation with VSD, are able to withstand the electrical limits set in the table above for rated voltage up to 575 V. If such conditions are not fully satisfied, output filters must be used.

3 - W22 Prime motors of the dual voltage type, for example 400/690 V or 380/660 V, which at the time of purchase were not specified for VSD operation, , are permitted to be operated with the VSD at the higher voltage provided that the limits defined in the table above for rated voltage up to 460 V are fully respected. Otherwise, a load reactor or a dV/dt filter must be installed in the VSD output.

12.2 INFLUENCE OF THE VSD ON THE MOTOR TEMPERATURE

Motors operating with frequency inverters may present a higher temperature rise than when operating under sinusoidal supply. This occurs due to the combined effects of the loss increase resulting from the PWM harmonics and the reduction in ventilation experienced by self-ventilated motors when operating at low frequencies. There are basically three solutions to avoid excessive overheating of the motor in VSD applications:

- Torque derating (oversizing of the self-ventilated motor frame size);
- Forced ventilation (use of an independent cooling system);
- Optimal Flux Solution (exclusive to applications where both motor and drive are WEG).

12.2.1 Torque Derating Criteria

In order to maintain the temperature rise of WEG motors within acceptable levels, when supplied by VSD, the speed range-related loadability limits established (for operation under constant flux condition) or (for operation under optimal flux condition) must be observed.

Notes:

1 - These derating curves relate to the motor thermal capability only and do not concern the insulation class. Speed regulation will depend on VSD mode of operation and proper adjustment.

2 - Torque derating is usually necessary when the motor is required to driveconstant torque loads (e.g. screw compressors, conveyors, extruders, etc.). For squared torque loads, such as pumps and fans, no torque derating is normally required.

3 - For operation above base (nameplate) speed, mechanical issues must be also observed.

12.2.2 Constant Flux Condition

Applicable when the motor is supplied by any commercial drive operating with any control scheme other than the Optimal Flux available in WEG drives.

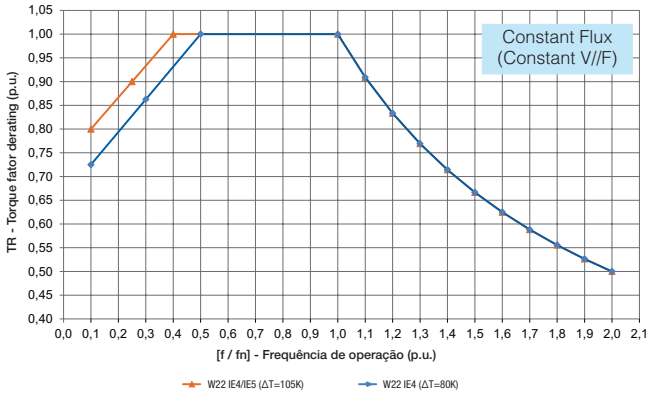

Figure 29. Derating curves for constant flux condition

12.2.3 Optimal Flux Condition

The study of the composition of the overall motor losses and its relation to operation parameters such as the frequency, the magnetic flux, the current, and the speed variation led to the determination of an optimal flux value for each operating frequency. The implementation of this solution within the CFW900 and CFW11 control algorithms mean that the motor optimal flux condition can be automatically applied by the drive throughout the speed range, resulting in a continuous minimization of losses. As a consequence of this loss minimization, the use of the optimal flux control provides higher efficiency and lower temperature rise. Therefore, the torque derating factors for this operating condition are lower than for constant V/f.

The optimal flux solution was developed for low frequency applications with constant torque loads.

It should not be used for variable torque loads nor when the operating speed range includes points above the base (rated) frequency. The Optimal Flux Solution may be only applied under the following conditions:

- The motor has an efficiency class IE2 or above;
- The motor is controlled by a WEG drive (CFW900 or CFW11);
- Sensorless vector control is used.

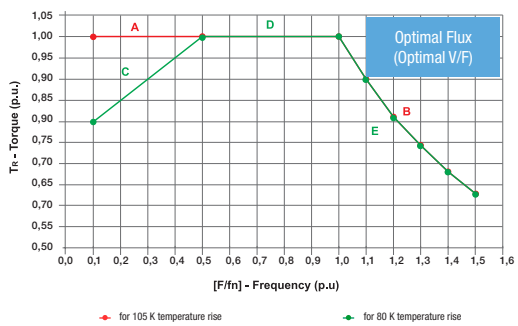

Figure 30.Derating curves for Optimal Flux condition

***Table 18.** Maximum safe operating speeds (rpm) for W22 Prime motors driven by VSD*

Maximum safe operating speeds (rpm)			
Output (kW)	TEFC Motors		
	2 poles	4 poles	6 poles
37	4500	2700	2400
45	3600	2700	2400
55	3600	2700	2400
75	3600	2700	1800
90	3600	2700	1800
110	3600	2700	1800
150	3600	2250	1800

Notes:

1 - For operation above nameplate speed, the electrical limitations (motor torque capability) must be also observed.

2 - The limits established are in accordance with the IEC 60034-1 Table 17.

3 - The permissible overspeed value is 10% above the limits given (not to exceed 2 minutes in duration) except where the maximum safe operating speed is the same as the synchronous speed at 60 Hz - in such case, please contact B&P.Elektromotoren.

4 - Operation above nameplate speed may require specially refined motor balancing. In such case, vibration and noise limits per IEC 60034-14 and IEC 60034-9, respectively, are not applicable.

5 - Bearing life will be affected by the length of time the motor is operated at various speeds.

6 - For speeds and ratings not covered by the table above, please contact B&P Elektromotoren.

12.3 CONSIDERATIONS REGARDING BEARING CURRENTS

Motors for variable speed drive applications up to frame size W280S/M, do not generally require any special considerations with respects to the bearings. However, time of purchase. Otherwise, WEG can modify motors that were not originally supplied with such protection under request.

Electrical Data | IE4 Multi-voltage (50HZ) - II Poles

Output		Frame	Full Load Torque (kgfm)	Locked Rotor Current Il/In	Locked Rotor Torque Tl/Tn	Break-down Torque Tb/Tn	Inertia J (kgm2)	Allowable locked rotor time (s)		Weight (kg)	Sound dB(A)	Rated speed (rpm)	% of full load						Full load current In (A)
													Efficiency			Power Factor			
kW	HP							Hot	Cold				50	75	100	50	75	100	
400V																			
45	60	225S/M	14,8	8,4	2,6	3,3	0,3185	90	41	413	74	2968	93,5	94,4	95,0	0,77	0,85	0,88	77,70
55	75	250S/M	18,1	8,6	2,9	3,1	0,5245	110	50	540	74	2965	93,9	94,7	95,3	0,80	0,87	0,89	93,60
75	100	W280S/M	24,6	8,8	3,0	3,2	0,5335	84	38	590	74	2970	94,4	95,0	95,6	0,81	0,87	0,89	127,00
90	125	280S/M	29,5	8,0	2,5	3,0	1,3577	79	36	750	77	2976	94,4	95,3	95,8	0,78	0,85	0,88	154,00
110	150	W315S/M	36,0	8,1	2,4	2,9	1,4453	68	31	880	77	2976	94,7	95,5	96,0	0,79	0,85	0,88	188,00
132	175	W315S/M	43,2	8,0	2,2	2,8	1,6643	59	27	940	77	2975	95,1	95,7	96,2	0,81	0,87	0,89	223,00
380V																			
45	60	225S/M	14,8	7,5	2,4	2,9	0,3185	103	47	413	74	2965	93,5	94,3	95,0	0,79	0,86	0,89	80,90
55	75	250S/M	18,1	7,7	2,6	2,8	0,5245	110	50	540	74	2965	93,9	94,6	95,3	0,83	0,88	0,89	98,50
75	100	W280S/M	24,6	7,8	3,0	2,9	0,5335	92	42	590	74	2965	94,3	95,0	95,6	0,83	0,88	0,90	132,00
90	125	280S/M	29,5	7,1	2,3	2,6	1,3577	84	38	750	77	2975	94,4	95,2	95,8	0,80	0,86	0,88	162,00
110	150	W315S/M	36,1	7,3	2,1	2,6	1,4453	73	33	880	77	2970	94,8	95,4	96,0	0,81	0,87	0,89	196,00
132	175	W315S/M	43,3	7,0	2,1	2,5	1,6643	64	29	940	77	2970	95,1	95,6	96,2	0,83	0,88	0,89	234,00
415V																			
45	60	225S/M	14,8	9,1	2,8	3,6	0,3185	84	38	413	74	2970	93,4	94,4	95,0	0,74	0,83	0,87	75,70
55	75	250S/M	18,0	9,2	3,1	3,4	0,5245	106	48	540	74	2970	93,9	94,8	95,3	0,79	0,86	0,88	91,20
75	100	W280S/M	24,6	9,6	3,6	3,5	0,5335	77	35	590	74	2970	94,3	95,1	95,6	0,79	0,86	0,89	123,00
90	125	280S/M	29,4	8,6	2,5	3,2	1,3577	75	34	750	77	2978	94,3	95,3	95,8	0,76	0,84	0,87	150,00
110	150	W315S/M	36,0	8,7	2,5	3,1	1,4453	64	29	880	77	2978	94,6	95,5	96,0	0,77	0,84	0,87	183,00
132	175	W315S/M	43,2	8,6	2,5	3,0	1,6643	55	25	940	77	2976	95,0	95,7	96,2	0,79	0,86	0,88	217,00

Electrical Data | IE4 Multi-voltage (50HZ) - IV Poles

Output		Frame	Full Load Torque (kgfm)	Locked Rotor Current Il/In	Locked Rotor Torque Tl/Tn	Break-down Torque Tb/Tn	Inertia J (kgm2)	Allowable locked rotor time (s)		Weight (kg)	Sound dB(A)	Rated speed (rpm)	% of full load						Full load current In (A)
													Efficiency			Power Factor			
kW	HP							Hot	Cold				50	75	100	50	75	100	
400V																			
37	50	225S/M	24,3	7,8	2,5	3,1	0,5198	58	128	377	64	1482	94,4	95,0	95,2	0,70	0,80	0,84	66,80
45	60	225S/M	29,6	7,7	2,5	3,1	0,5574	46	101	392	64	1480	94,5	95,1	95,4	0,67	0,78	0,83	82,00
55	75	250S/M	36,1	8,2	2,8	2,9	1,0454	48	106	530	64	1483	95,4	95,7	95,7	0,73	0,82	0,85	97,60
75	100	280S/M	49,1	7,6	2,2	2,6	2,6094	44	97	775	71	1487	95,3	95,8	96,0	0,70	0,80	0,83	136,00
90	125	280S/M	59,0	7,5	2,2	2,5	3,3001	43	95	880	71	1487	95,6	96,0	96,1	0,72	0,81	0,84	161,00
110	150	W315S/M	72,1	7,9	2,5	2,7	3,3001	32	70	985	71	1487	95,6	96,1	96,3	0,72	0,80	0,84	196,00
380V																			
37	50	225S/M	24,4	7,1	2,2	2,7	0,5198	63	139	377	64	1479	94,6	95,0	95,2	0,73	0,82	0,85	69,50
45	60	225S/M	29,6	7,0	2,2	2,8	0,5574	49	108	392	64	1479	94,7	95,1	95,4	0,71	0,80	0,84	85,30
55	75	250S/M	36,2	7,4	2,5	2,5	1,0454	50	110	530	64	1481	95,4	95,6	95,7	0,76	0,84	0,86	102,00
75	100	280S/M	49,2	6,8	1,9	2,3	2,6094	48	106	775	71	1485	95,4	95,8	96,0	0,73	0,81	0,84	141,00
90	125	280S/M	59,0	6,8	1,9	2,3	3,3001	47	103	880	71	1485	95,7	95,9	96,1	0,75	0,83	0,85	167,00
110	150	W315S/M	72,1	7,1	2,1	2,4	3,3001	35	77	985	71	1485	95,7	96,0	96,3	0,74	0,82	0,85	204,00
415V																			
37	50	225S/M	24,3	8,4	2,7	3,3	0,5198	54	119	377	64	1483	94,3	95,0	95,2	0,67	0,78	0,83	65,10
45	60	225S/M	29,6	8,1	2,8	3,4	0,5574	43	95	392	64	1482	94,4	95,1	95,4	0,64	0,76	0,81	81,00
55	75	250S/M	36,1	9,0	3,1	3,1	1,0454	44	97	530	64	1485	95,3	95,7	95,7	0,71	0,81	0,85	94,10
75	100	280S/M	49,1	8,1	2,5	2,8	2,6094	41	90	775	71	1488	95,3	95,9	96,0	0,68	0,78	0,82	133,00
90	125	280S/M	58,9	8,3	2,5	2,7	3,3001	40	88	880	71	1488	95,5	96,1	96,1	0,70	0,80	0,84	155,00
110	150	W315S/M	72,0	8,4	2,7	2,9	3,3001	30	66	985	71	1488	95,6	96,1	96,3	0,69	0,79	0,83	191,00

Electrical Data | IE4 (60HZ)

Output		Frame	Full Load Torque (kgfm)	Locked Rotor Current Il/In	Locked Rotor Torque Tl/Tn	Break-down Torque Tb/Tn	Inertia J (kgm2)	Allowable locked rotor time (s)		Weight (kg)	Sound dB(A)	440V							
												Rated speed (rpm)	% of full load						Full load current In (A)
													Efficiency			Power Factor			
kW	HP							Hot	Cold				50	75	100	50	75	100	
II Poles																			
75	100	250S/M	20,5	7,7	2,6	3,0	0,3384	30	66	440	79	3560	93,0	94,1	95,0	0,74	0,82	0,86	121,00
90	125	W280S/M	24,6	9,0	3,1	3,5	0,4060	16	35	490	79	3565	93,6	94,6	95,4	0,75	0,84	0,87	143,00
110	150	W280S/M	30,1	9,2	3,2	3,5	0,4906	16	35	535	79	3565	94,2	95,0	95,4	0,79	0,86	0,88	172,00
132	175	W315S/M	35,9	8,4	2,6	3,3	1,4220	26	57	860	81	3580	94,7	95,6	95,8	0,79	0,86	0,88	205,00
150	200	W315S/M	40,9	6,8	2,3	2,5	1,6886	31	68	930	81	3575	95,2	95,8	95,8	0,85	0,89	0,90	228,00
IV Poles																			
55	75	250S/M	30,0	10,2	3,3	3,5	0,9442	20	44	478	68	1787	94,5	95,3	95,8	0,66	0,77	0,82	91,90
75	100	250S/M	40,9	8,2	3,2	3,3	1,0116	34	75	520	68	1785	95,0	95,7	96,2	0,71	0,80	0,85	120,00
90	125	W280S/M	49,1	8,2	3,1	3,1	1,1128	31	68	570	68	1784	95,2	95,8	96,2	0,73	0,82	0,85	145,00
110	150	W280S/M	60,1	8,2	3,5	3,3	1,2477	24	53	605	68	1784	95,1	95,8	96,2	0,70	0,80	0,84	178,00
132	175	W315S/M	71,9	7,9	3,0	3,1	2,6726	22	48	895	75	1788	95,5	96,1	96,5	0,67	0,77	0,82	219,00
150	200	W315S/M	81,8	7,9	3,0	3,0	3,0544	20	44	955	75	1787	95,6	96,2	96,5	0,68	0,78	0,82	249,00
160	220	W315S/M	87,2	7,9	3,0	3,0	3,3598	19	42	1000	75	1787	95,5	96,0	96,5	0,69	0,78	0,83	262,00

Electrical Data | IE5 (50HZ)

Output		Frame	Full Load Torque (kgfm)	Locked Rotor Current Il/In	Locked Rotor Torque Tl/Tn	Break-down Torque Tb/Tn	Inertia J (kgm2)	Allowable locked rotor time (s)		Weight (kg)	Sound dB(A)	400V							
												Rated speed (rpm)	% of full load						Full load current In (A)
													Efficiency			Power Factor			
kW	HP							Hot	Cold				50	75	100	50	75	100	
II Poles																			
30	40	225S/M	9,82	9,6	3,1	4,0	0,3121	40	88	375	74	2975	93,1	94,3	95,5	0,69	0,79	0,84	54,00
37	50	225S/M	12,10	9,7	3,1	3,9	0,3641	28	62	425	74	2975	93,7	94,7	95,8	0,73	0,82	0,86	64,80
45	60	225S/M	14,70	10,3	3,2	4,0	0,3771	24	53	430	74	2975	94,0	94,9	96,0	0,72	0,82	0,86	78,70
55	75	250S/M	18,00	12,5	4,9	5,0	0,6429	36	79	605	74	2980	93,6	94,9	96,2	0,70	0,80	0,85	97,10
75	100	280S/M	24,50	11,7	4,1	4,7	1,5900	51	112	877	77	2987	93,8	95,3	96,5	0,69	0,80	0,84	134,00
90	125	280S/M	29,40	10,1	3,4	3,9	1,5900	46	101	877	77	2984	94,5	95,6	96,6	0,74	0,83	0,87	155,00
IV Poles																			
30	40	225S/M	19,70	10,9	3,7	4,1	0,6634	48	106	405	64	1487	94,1	95,2	95,9	0,61	0,74	0,79	57,20
37	50	225S/M	24,20	10,3	4,0	4,3	0,7371	48	106	435	64	1487	94,5	95,4	96,1	0,62	0,74	0,80	69,50
45	60	225S/M	29,50	9,1	3,6	3,8	0,7322	36	79	435	64	1484	94,9	95,6	96,3	0,63	0,75	0,81	83,30
55	75	250S/M	36,00	9,2	3,5	3,5	1,2800	44	97	595	64	1486	95,4	96,0	96,5	0,66	0,77	0,82	100,00
75	100	280S/M	49,00	10,3	3,8	3,9	2,8700	36	79	864	71	1492	95,0	96,0	96,7	0,59	0,72	0,78	144,00
90	125	280S/M	58,90	8,7	3,0	3,2	2,8700	35	77	864	71	1489	96,0	96,4	96,9	0,66	0,77	0,82	163,00

Mechanical Data | (mm)

Frame | 225S/M - W280S/M

Foot Mounted Motors, Terminal Box Top

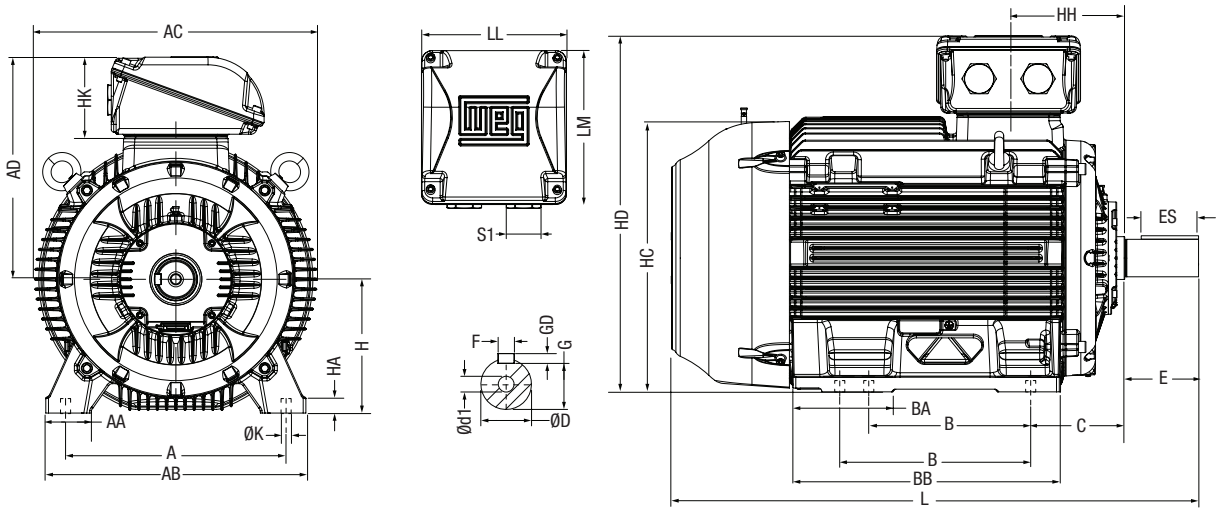

Foot Mounted Motors, Terminal Box Left or Right Side

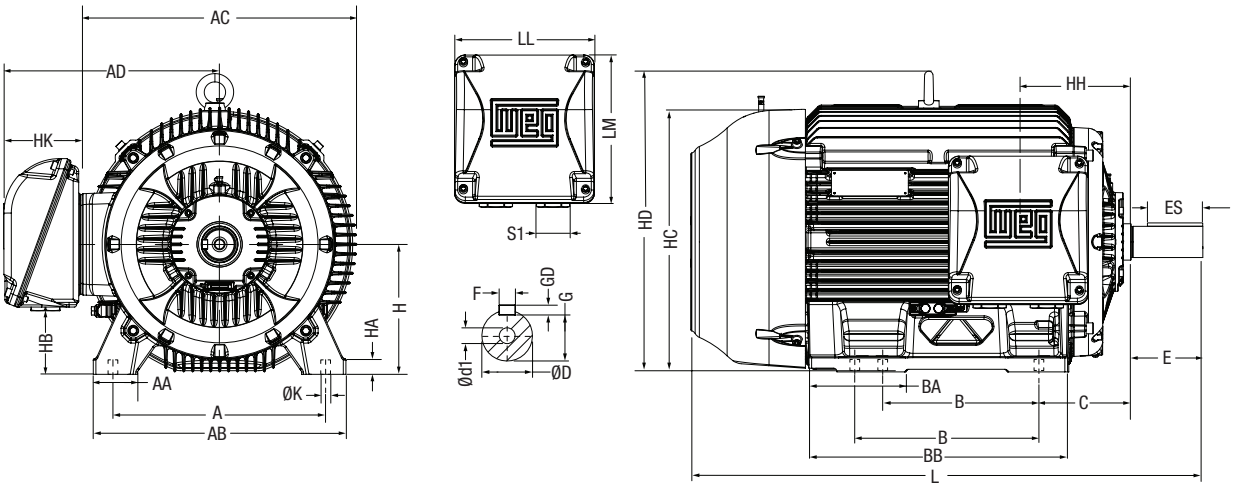

Drip Cover

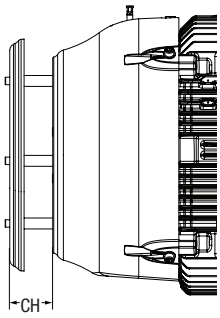

Frame | 280S/M - W315S/M

Foot Mounted Motors, Terminal Box Top

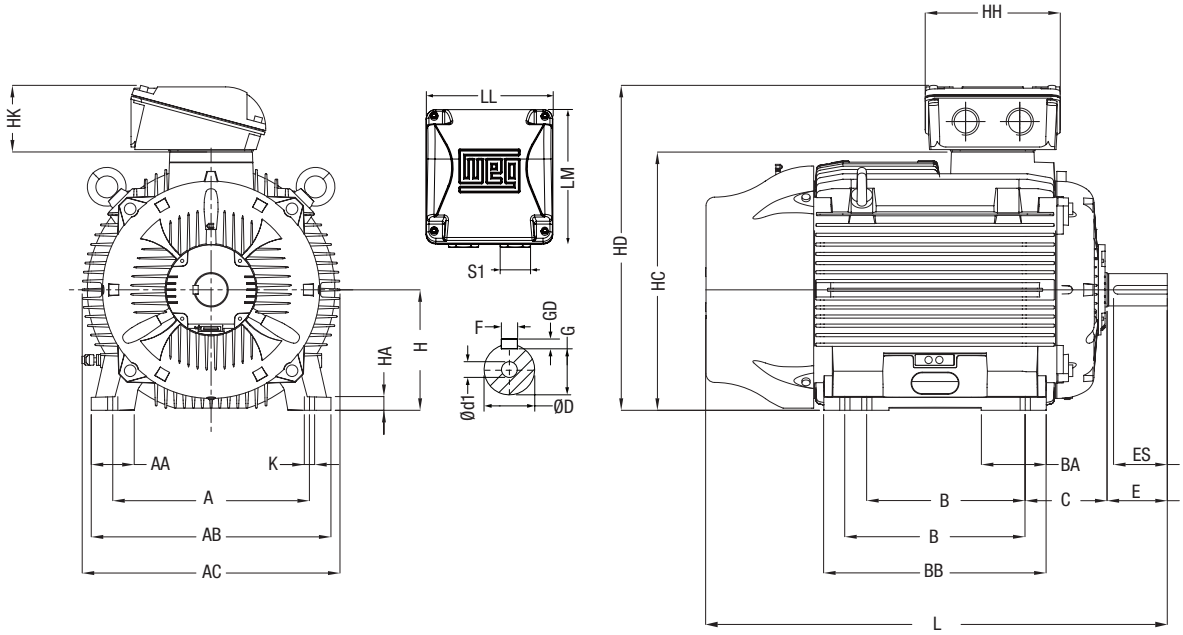

Foot Mounted Motors, Terminal Box Left or Right Side

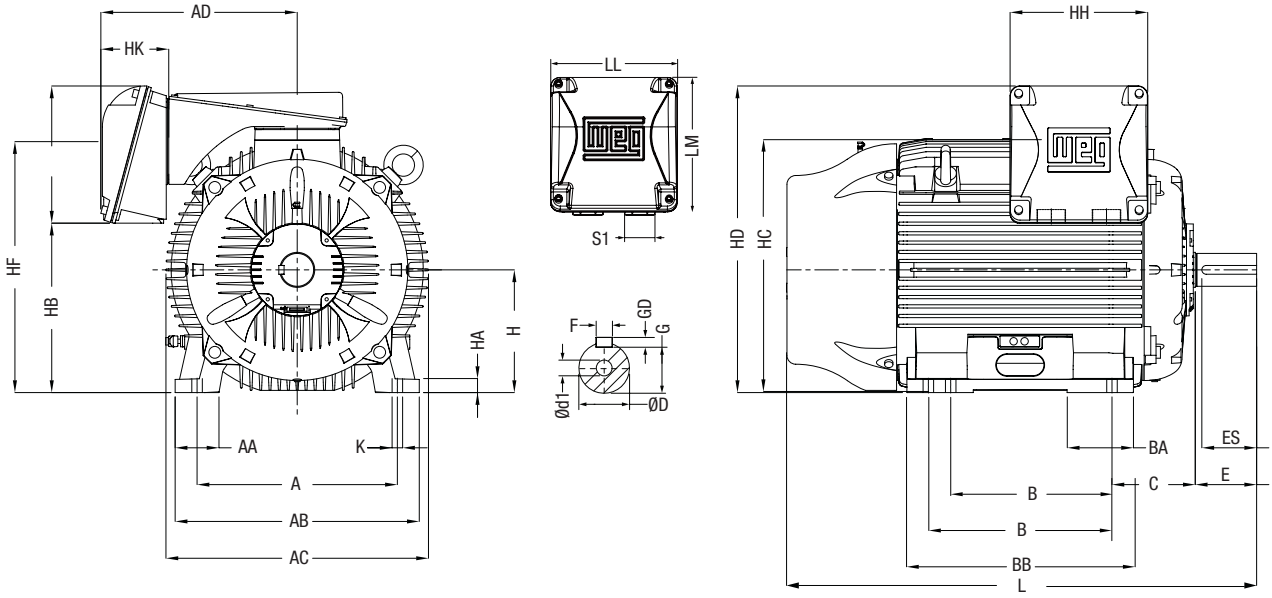

Drip Cover

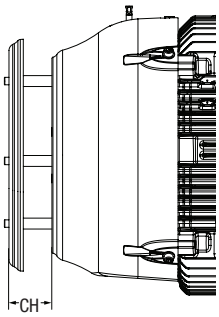

FRAMES	FEET										T. BOX			KEYWAY			
	A	B	K	C	H	AA	AB	BA	BB	HA	HK	HH	S1 - EUR	F	GD	G	ES
225S/M 2P	356	286/311	18,5	149	225	80	436	95	498,0	29	153	203,5	2xM50x1,5	16	10	49	100
225S/M 4P														18	11	53	125
250S/M 2P	406	311/349	24	120	250	85	486	130	447	30		219	2xM63x1,5				
250S/M 4P																58	
W280S/M 2P	457	368/419		190	280	105	557	144,5	507	29		247,5					
W280S/M 4P														20	12	67,5	
280S/M 2P								151,0	517	42	152	266		18	11	58,0	
280S/M 4P														20	12	67,5	
W315S/M 2P	508	406/457	28	216	315	120	630	167	555	35	185	265		18	11	58	
W315S/M 4P														22	14	71	160

FRAMES	SHAFT END			DRIP COVER		EXTERNAL									BEARINGS	
	E	D	d1	LCH	CH	L	AC	AD	HC	HD - Terminal Box Top	AC	AD	HB	HD - Terminal Box Left or Right Side	D.E.	N.D.E.
225S/M 2P	110	55m6	DM20	965	83	882	488	396	469	620	488	396	104	538,5	6314 C3	6314 C3
225S/M 4P	140	60m6		995		912										
250S/M 2P				1070		987	528	419	514	666	528	419	129,5	579,0		
250S/M 4P		65m6														
W280S/M 2P				1098		1015			544	699			145	609,0		
W280S/M 4P		75m6													6316 C3	
280S/M 2P		65m6		1171	100	1071	599	475	580	752	599	448	386	700	6314 C3	
280S/M 4P		75m6													6316 C3	
W315S/M 2P		65m6		1223	100	1123*			615	790			421	735	6314 C3	
W315S/M 4P	170	80m6		1253		1153*									6319 C3	

** Total length (L and Lch) reduction of 50 mm for footless motor.*

Flange Mounted Motors | "FF" Flange

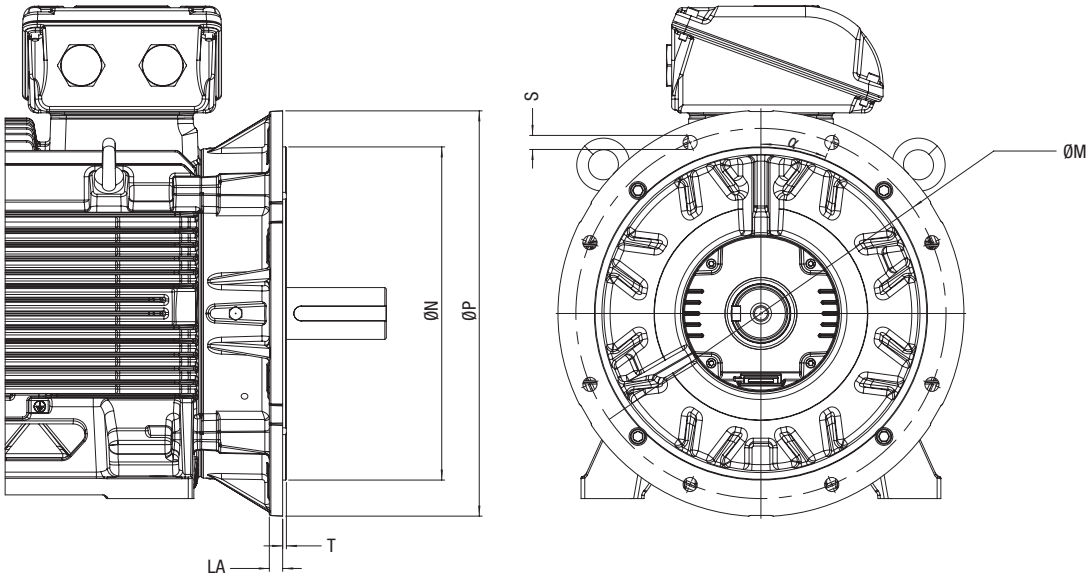

Frame	Flange	LA	M	N	P	S	T	α	N° of holes
225S/M	FF-400	18	400	350	450	19	5	22°50'	8
250S/M	FF-500	20	500	450	550				
W280S/M									
280S/M		18							
W315S/M	FF-600	22	600	550	660/780*	24	6		

Note:
**Only for motors fitted with air deflector in drive end side.*
Dimensions are in mm.

Flange Mounted Motors | "NEMA C" Flange

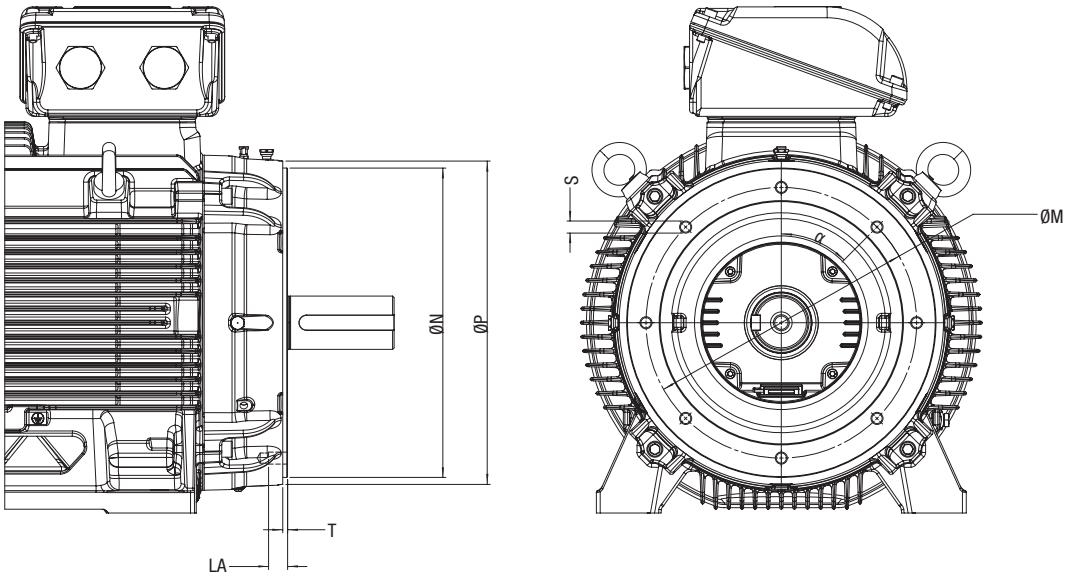

Frame	Flange	LA	M	N	P	S	T	α	N° of holes
225S/M	FC-279	25	317,5	279,4	395	UNC 5/8"x11	6,3	45°	8
250S/M	FC-355		406,4	355,6	455				
W280S/M									
280S/M									
W315S/M	FC-368		419,1	368,3					

Dimensions are in mm.

B&P ELEKTROMOTOREN BV

Expeditieweg 21
6657 KM Boven-Leeuwen

info@bnpelektromotoren.nl
+31 (0)344 616 267

BTW nr. **NL819113918B01**
KvK nr. **30237800**
ING Bank **NL60 INGB 0675 304 792**

B&P Elektromotoren

www.bnpelektromotoren.nl