ENGINEERING TOMORROW

B&P Elektromotoren

Danfoss

Design Guide
VLT® AutomationDrive FC 302

90–710 kW, Enclosure Sizes D and E

www.bnpelektromotoren.nl

VLT®

Contents

1 Introduction 4

1.1 Purpose of the Design Guide 4
1.2 Additional Resources 4
1.3 Document and Software Version 4
1.4 Conventions 4

2 Safety 5

2.1 Safety Symbols 5
2.2 Qualified Personnel 5
2.3 Safety Precautions 5

3 Approvals and Certifications 7

3.1 Regulatory/Compliance Approvals 7
3.2 Enclosure Protection Ratings 9

4 Product Overview 11

4.1 VLT® High-power Drives 11
4.2 Enclosure Size by Power Rating 11
4.3 Overview of Enclosures, 380–500 V 12
4.4 Overview of Enclosures, 525–690 V 14
4.5 Kit Availability 16

5 Product Features 17

5.1 Automated Operational Features 17
5.2 Custom Application Features 19
5.3 Dynamic Braking Overview 23
5.4 Mechanical Holding Brake Overview 24
5.5 Load Share Overview 27
5.6 Regen Overview 28
5.7 Back-channel Cooling Overview 29

6 Options and Accessories Overview 31

6.1 Fieldbus Devices 31
6.2 Functional Extensions 32
6.3 Motion Control and Relay Cards 34
6.4 Brake Resistors 34
6.5 Sine-wave Filters 35
6.6 dU/dt Filters 35
6.7 Common-mode Filters 35
6.8 Harmonic Filters 35
6.9 High-power Kits 35

 Danfoss A/S © 01/2018 All rights reserved.

7 Specifications 36
7.1 Electrical Data, 380–500 V 36
7.2 Electrical Data, 525–690 V 40
7.3 Mains Supply 44
7.4 Motor Output and Motor Data 44
7.5 Ambient Conditions 44
7.6 Cable Specifications 45
7.7 Control Input/Output and Control Data 45
7.8 Enclosure Weights 48

8 Exterior and Terminal Dimensions 49
8.1 D1h Exterior and Terminal Dimensions 49
8.2 D2h Exterior and Terminal Dimensions 55
8.3 D3h Exterior and Terminal Dimensions 61
8.4 D4h Exterior and Terminal Dimensions 66
8.5 D5h Exterior and Terminal Dimensions 71
8.6 D6h Exterior and Terminal Dimensions 80
8.7 D7h Exterior and Terminal Dimensions 91
8.8 D8h Exterior and Terminal Dimensions 101
8.9 E1h Exterior and Terminal Dimensions 112
8.10 E2h Exterior and Terminal Dimensions 118
8.11 E3h Exterior and Terminal Dimensions 124
8.12 E4h Exterior and Terminal Dimensions 131

9 Mechanical Installation Considerations 138
9.1 Storage 138
9.2 Lifting the Unit 138
9.3 Operating Environment 138
9.4 Mounting Configurations 139
9.5 Cooling 140
9.6 Derating 140

10 Electrical Installation Considerations 144
10.1 Safety Instructions 144
10.2 Wiring Schematic 145
10.3 Connections 146
10.4 Control Wiring and Terminals 148
10.5 Fuses and Circuit Breakers 151
10.6 Motor 153
10.7 Braking 155
10.8 Residual Current Devices (RCD) and Insulation Resistance Monitor (IRM) 158

 Danfoss A/S © 01/2018 All rights reserved.

10.9 Leakage Current 158
10.10 IT Mains 159
10.11 Efficiency 159
10.12 Acoustic Noise 160
10.13 dU/dt Conditions 160
10.14 Electromagnetic Compatibility (EMC) Overview 166
10.15 EMC-compliant Installation 169
10.16 Harmonics Overview 172

11 Basic Operating Principles of a Drive 175
11.1 Description of Operation 175
11.2 Drive Controls 175

12 Application Examples 184
12.1 Programming a Closed-loop Drive System 184
12.2 Wiring Configurations for Automatic Motor Adaptation (AMA) 184
12.3 Wiring Configurations for Analog Speed Reference 185
12.4 Wiring Configurations for Start/Stop 185
12.5 Wiring Configuration for an External Alarm Reset 187
12.6 Wiring Configuration for Speed Reference Using a Manual Potentiometer 187
12.7 Wiring Configuration for Speed Up/Speed Down 187
12.8 Wiring Configuration for RS485 Network Connection 188
12.9 Wiring Configuration for a Motor Thermistor 188
12.10 Wiring Configuration for a Relay Set-up with Smart Logic Control 189
12.11 Wiring Configuration for Mechanical Brake Control 189
12.12 Wiring Configuration for the Encoder 190
12.13 Wire Configuration for Torque and Stop Limit 190

13 How to Order a Drive 192
13.1 Drive Configurator 192
13.2 Ordering Numbers for Options and Accessories 196
13.3 Ordering Numbers for Filters and Brake Resistors 200
13.4 Spare Parts 200

14 Appendix 201
14.1 Abbreviations and Symbols 201
14.2 Definitions 202

Index 203

 Danfoss A/S © 01/2018 All rights reserved.

1

1 Introduction

1.1 Purpose of the Design Guide

This design guide is intended for:

- Project and systems engineers.
- Design consultants.
- Application and product specialists.

The design guide provides technical information to understand the capabilities of the drive for integration into motor control and monitoring systems.

VLT® is a registered trademark.

1.2 Additional Resources

Other resources are available to understand advanced drive operation, programming, and directives compliance.

- The *operating guide* provides detailed information for the installation and start-up of the drive.
- The *programming guide* provides greater detail on how to work with parameters and includes many application examples.
- The *VLT® FC Series - Safe Torque Off Operating Guide* describes how to use Danfoss drives in functional safety applications. This manual is supplied with the drive when the Safe Torque Off option is present.
- The *VLT® Brake Resistor MCE 101 Design Guide* describes how to select the optimal brake resistor.
- The *VLT® Advanced Harmonic Filters AHF 005/AHF 010 Design Guide* describes harmonics, various mitigation methods, and the operating principle of the advanced harmonics filter. This guide also describes how to select the correct advanced harmonics filter for a particular application.
- The *Output Filters Design Guide* explains why it is necessary to use output filters for certain applications, and how to select the optimal dU/dt or sine-wave filter.
- Optional equipment is available that can change some of the information described in these publications. For specific requirements, see the instructions supplied with the options.

Supplementary publications and manuals are available from Danfoss. See *drives.danfoss.com/downloads/portal/#/* for listings.

1.3 Document and Software Version

This manual is regularly reviewed and updated. All suggestions for improvement are welcome. *Table 1.1* shows the document version and the corresponding software version.

Edition	Remarks	Software version
MG38C2xx	Added D1h–D8h content	8.03

Table 1.1 Document and Software Version

1.4 Conventions

- Numbered lists indicate procedures.
- Bullet lists indicate other information and description of illustrations.
- Italicized text indicates:
  - Cross-reference.
  - Link.
  - Footnote.
  - Parameter name, parameter group name, parameter option.
- All dimensions in drawings are in mm (in).
- An asterisk (*) indicates a default setting of a parameter.

 Danfoss A/S © 01/2018 All rights reserved.

2 Safety

2.1 Safety Symbols

The following symbols are used in this guide:

⚠WARNING

Indicates a potentially hazardous situation that could result in death or serious injury.

⚠CAUTION

Indicates a potentially hazardous situation that could result in minor or moderate injury. It can also be used to alert against unsafe practices.

NOTICE

Indicates important information, including situations that can result in damage to equipment or property.

2.2 Qualified Personnel

Only qualified personnel are allowed to install or operate this equipment.

Qualified personnel are defined as trained staff, who are authorized to install, commission, and maintain equipment, systems, and circuits in accordance with pertinent laws and regulations. Also, the personnel must be familiar with the instructions and safety measures described in this manual.

2.3 Safety Precautions

⚠WARNING

HIGH VOLTAGE

Drives contain high voltage when connected to AC mains input, DC supply, load sharing, or permanent motors. Failure to use qualified personnel to install, start up, and maintain the drive can result in death or serious injury.

- **Only qualified personnel must install, start up, and maintain the drive.**

⚠WARNING

DISCHARGE TIME

The drive contains DC-link capacitors, which can remain charged even when the drive is not powered. High voltage can be present even when the warning LED indicator lights are off. Failure to wait for the specified amount of time listed in *Table 2.1* after power has been removed before performing service or repair work can result in death or serious injury.

1. **Stop the motor.**
2. **Disconnect AC mains and remote DC-link supplies, including battery back-ups, UPS, and DC-link connections to other drives.**
3. **Disconnect or lock motor.**
4. **Wait for the capacitors to discharge fully. Refer to *Table 2.1*.**
5. **Before performing any service or repair work, use an appropriate voltage measuring device to make sure that the capacitors are fully discharged.**

Voltage	Power rating (normal overload)	Enclosure	Minutes to disharge
380–500	90–250 kW 125–350 hp	D1h–D8h	20
380–500	315–500 kW 450–650 hp	E1h–E4h	40
525–690	55–315 kW 60–350 hp	D1h–D8h	20
525–690	355–710 kW 400–750 hp	E1h–E4h	40

Table 2.1 Discharge Time for Enclosures D1h–D8h and E1h–E4h

⚠WARNING

LEAKAGE CURRENT HAZARD

Leakage currents exceed 3.5 mA. Failure to ground the drive properly can result in death or serious injury.

- **Ensure the correct grounding of the equipment by a certified electrical installer.**

NOTICE

MAINS SHIELD SAFETY OPTION

A mains shield option is available for enclosures with a protection rating of IP21/IP54 (Type 1/Type 12). The mains shield is a cover installed inside the enclosure to protect against the accidental touch of the power terminals, according to BGV A2, VBG 4.

 Danfoss A/S © 01/2018 All rights reserved.

2

2.3.1 ADN-compliant Installation

To prevent spark formation in accordance with the European Agreement concerning International Carriage of Dangerous Goods by Inland Waterways (ADN), take precautions for drives with protection rating of IP00 (Chassis), IP20 (Chassis), IP21 (Type 1), or IP54 (Type 12).

- Do not install a mains switch.
- Ensure that *parameter 14-50 RFI Filter* is set to *[1] On*.
- Remove all relay plugs marked *RELAY*. See *Illustration 2.1*.
- Check which relay options are installed, if any. The only allowed relay option is VLT® Extended Relay Card MCB 113.

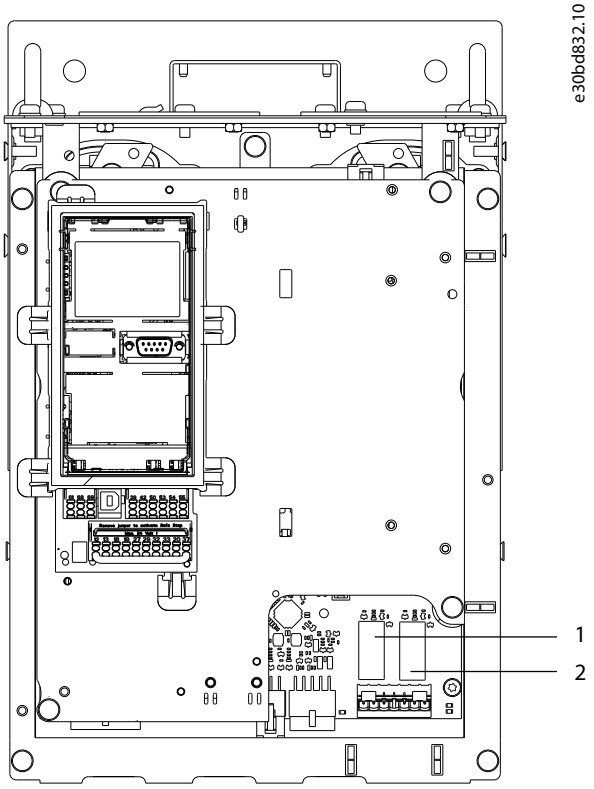

1, 2	Relay plugs

Illustration 2.1 Location of Relay Plugs

 Danfoss A/S © 01/2018 All rights reserved.

3 Approvals and Certifications

This section provides a brief description of the various approvals and certifications that are found on Danfoss drives. Not all approvals are found on all drives.

3.1 Regulatory/Compliance Approvals

NOTICE

IMPOSED LIMITATIONS ON THE OUTPUT FREQUENCY

From software version 6.72 onwards, the output frequency of the drive is limited to 590 Hz due to export control regulations. Software versions 6.xx also limit the maximum output frequency to 590 Hz, but these versions cannot be flashed, that is, neither downgraded nor upgraded.

3.1.1.1 CE Mark

The CE mark (Communauté Européenne) indicates that the product manufacturer conforms to all applicable EU directives. The EU directives applicable to the design and manufacture of drives are listed in *Table 3.1*.

NOTICE

The CE mark does not regulate the quality of the product. Technical specifications cannot be deduced from the CE mark.

EU Directive	Version
Low Voltage Directive	2014/35/EU
EMC Directive	2014/30/EU
Machinery Directive[1)]	2014/32/EU
ErP Directive	2009/125/EC
ATEX Directive	2014/34/EU
RoHS Directive	2002/95/EC

Table 3.1 EU Directives Applicable to Drives

1) Machinery Directive conformance is only required for drives with an integrated safety function.

NOTICE

Drives with an integrated safety function, such as Safe Torque Off (STO), must comply with the Machinery Directive.

Declarations of conformity are available on request.

Low Voltage Directive
Drives must be CE-labeled in accordance with the Low Voltage Directive of January 1, 2014. The Low Voltage Directive applies to all electrical equipment in the 50–1000 V AC and the 75–1500 V DC voltage ranges.

The aim of the directive is to ensure personal safety and avoid property damage when operating electrical equipment that is installed, maintained, and used as intended.

EMC Directive
The purpose of the EMC (electromagnetic compatibility) Directive is to reduce electromagnetic interference and enhance immunity of electrical equipment and installations. The basic protection requirement of the EMC Directive is that devices that generate electromagnetic interference (EMI), or whose operation can be affected by EMI, must be designed to limit the generation of electromagnetic interference. The devices must have a suitable degree of immunity to EMI when properly installed, maintained, and used as intended.

Electrical equipment devices used alone or as part of a system must bear the CE mark. Systems do not require the CE mark, but must comply with the basic protection requirements of the EMC Directive.

Machinery Directive
The aim of the Machinery Directive is to ensure personal safety and avoid property damage to mechanical equipment used in its intended application. The Machinery Directive applies to a machine consisting of an aggregate of interconnected components or devices of which at least 1 is capable of mechanical movement.

Drives with an integrated safety function must comply with the Machinery Directive. Drives without a safety function do not fall under the Machinery Directive. If a drive is integrated into a machinery system, Danfoss can provide information on safety aspects relating to the drive.

When drives are used in machines with at least 1 moving part, the machine manufacturer must provide a declaration stating compliance with all relevant statutes and safety measures.

3.1.1.2 ErP Directive

The ErP Directive is the European Ecodesign Directive for energy-related products, including drives. The aim of the directive is to increase energy efficiency and the level of protection of the environment, while increasing the security of the energy supply. Environmental impact of energy-related products includes energy consumption throughout the entire product life cycle.

3.1.1.3 UL Listing

The Underwriters Laboratory (UL) mark certifies the safety of products and their environmental claims based on standardized testing. Drives of voltage T7 (525–690 V) are

 Danfoss A/S © 01/2018 All rights reserved.

UL-certified for only 525–600 V. The drive complies with UL 61800-5-1 thermal memory retention requirements. For more information, refer to *chapter 10.6.1 Motor Thermal Protection*.

3.1.1.4 CSA/cUL

The CSA/cUL approval is for AC drives of voltage rated at 600 V or lower. The standard ensures that, when the drive is installed according to the provided operating/installation guide, the equipment meets the UL standards for electrical and thermal safety. This mark certifies that the product performs to all required engineering specifications and testing. A certificate of compliance is provided on request.

3.1.1.5 EAC

The EurAsian Conformity (EAC) mark indicates that the product conforms to all requirements and technical regulations applicable to the product per the EurAsian Customs Union, which is composed of the member states of the EurAsian Economic Union.

The EAC logo must be both on the product label and on the packaging label. All products used within the EAC area, must be bought at Danfoss inside the EAC area.

3.1.1.6 UKrSEPRO

UKrSEPRO certificate ensures quality and safety of both products and services, in addition to manufacturing stability according to Ukrainian regulatory standards. The UkrSepro certificate is a required document to clear customs for any products coming into and out of the territory of Ukraine.

3.1.1.7 TÜV

TÜV SÜD is a European safety organization which certifies the functional safety of the drive in accordance to EN/IEC 61800-5-2. The TÜV SÜD both tests products and monitors their production to ensure that companies stay compliant with their regulations.

3.1.1.8 RCM

The Regulatory Compliance Mark (RCM) indicates compliance with telecommunications and EMC/radio-communications equipment per the Australian Communications and Media Authorities EMC labeling notice. RCM is now a single compliance mark covering both the A-Tick and the C-Tick compliance marks. RCM compliance is required for placing electrical and electronic devices on the market in Australia and New Zealand.

3.1.1.9 Marine

In order for ships and oil/gas platforms to receive a regulatory license and insurance, 1 or more marine certification societies must certify these applications. Up to 12 different marine classification societies have certified Danfoss drive series.

To view or print marine approvals and certificates, go to the download area at *drives.danfoss.com/industries/marine-and-offshore/marine-type-approvals/#/*.

3.1.2 Export Control Regulations

Drives can be subject to regional and/or national export control regulations.

An ECCN number is used to classify all drives that are subject to export control regulations. The ECCN number is provided in the documents accompanying the drive.

In case of re-export, it is the responsibility of the exporter to ensure compliance with the relevant export control regulations.

 Danfoss A/S © 01/2018 All rights reserved.

3.2 Enclosure Protection Ratings

The VLT® drive series are available in various enclosure protection to accommodate the needs of the application. Enclosure protection ratings are provided based on 2 international standards:

- UL type validates that the enclosures meet NEMA (National Electrical Manufacturers Association) standards. The construction and testing requirements for enclosures are provided in NEMA Standards Publication 250-2003 and UL 50, Eleventh Edition.
- IP (Ingress Protection) ratings outlined by IEC (International Electrotechnical Commission) in the rest of the world.

Standard Danfoss VLT® drive series are available in various enclosure protections to meet the requirements of IP00 (Chassis), IP20 (Protected chassis) or IP21 (UL Type 1), or IP54 (UL Type 12). In this manual, UL Type is written as Type. For example, IP21/Type 1.

UL type standard

Type 1 – Enclosures constructed for indoor use to provide a degree of protection to personnel against incidental contact with the enclosed units and to provide a degree of protection against falling dirt.

Type 12 – General-purpose enclosures are intended for use indoors to protect the enclosed units against the following:

- Fibers
- Lint
- Dust and dirt
- Light splashing
- Seepage
- Dripping and external condensation of noncorrosive liquids

There can be no holes through the enclosure and no conduit knockouts or conduit openings, except when used with oil-resistant gaskets to mount oil-tight or dust-tight mechanisms. Doors are also provided with oil-resistant gaskets. In addition, enclosures for combination controllers have hinged doors, which swing horizontally and require a tool to open.

IP standard

Table 3.2 provides a cross-reference between the 2 standards. *Table 3.3* demonstrates how to read the IP number and then defines the levels of protection. The drives meet the requirements of both.

NEMA and UL	IP
Chassis	IP00
Protected chassis	IP20
Type 1	IP21
Type 12	IP54

Table 3.2 NEMA and IP Number Cross-reference

 Danfoss A/S © 01/2018 All rights reserved.

1st digit	2nd digit	Level of protection
0	–	No protection.
1	–	Protected to 50 mm (2.0 in). No hands would be able to get into the enclosure.
2	–	Protected to 12.5 mm (0.5 in). No fingers would be able to get into the enclosure.
3	–	Protected to 2.5 mm (0.1 in). No tools would be able to get into the enclosure.
4	–	Protected to 1.0 mm (0.04 in). No wires would be able to get into the enclosure.
5	–	Protected against dust – limited entry.
6	–	Protected totally against dust.
–	0	No protection.
–	1	Protected from vertical dripping water.
–	2	Protected from dripping water at 15° angle.
–	3	Protected from water at 60° angle.
–	4	Protected from splashing water.
–	5	Protected from water jets.
–	6	Protected from strong water jets.
–	7	Protected from temporary immersion.
–	8	Protected from permanent immersion.

Table 3.3 IP Number Breakdown

 Danfoss A/S © 01/2018 All rights reserved.

4 Product Overview

4.1 VLT® High-power Drives

The Danfoss VLT® drives described in this manual are available as free-standing, wall-mounted, or cabinet-mounted units. Each VLT® drive is configurable, compatible, and efficiency-optimized for all standard motor types, which avoids the restrictions of motor-drive package deals.

Benefits of VLT® Drives

- Available in various enclosure sizes and protection ratings.
- 98% efficiency reduces operating costs.
- Unique back-channel cooling design reduces the need for more cooling equipment, resulting in lower installation and recurring costs.
- Lower power consumption for control room cooling equipment.
- Reduced ownership costs.
- Consistent user interface across the entire range of Danfoss drives.
- Application-oriented start-up wizards.
- Multi-language user interface.

4.2 Enclosure Size by Power Rating

kW[1)]	Hp[1)]	Available enclosures
90	125	D1h/D3h/D5h/D6h
110	150	D1h/D3h/D5h/D6h
132	200	D1h/D3h/D5h/D6h
160	250	D2h/D4h/D7h/D8h
200	300	D2h/D4h/D7h/D8h
250	350	D2h/D4h/D7h/D8h
315	450	E1h/E3h
355	500	E1h/E3h
400	550	E1h/E3h
450	600	E2h/E4h
500	650	E2h/E4h

Table 4.1 Enclosure Power Ratings, 380–500 V

1) All power ratings are taken at high overload.
Output is measured at 400 V (kW) and 460 V (hp).

kW[1)]	Hp[1)]	Available enclosures
55	60	D1h/D3h/D5h/D6h
75	75	D1h/D3h/D5h/D6h
90	100	D1h/D3h/D5h/D6h
110	125	D1h/D3h/D5h/D6h
132	150	D1h/D3h/D5h/D6h
160	200	D2h/D4h/D7h/D8h
200	250	D2h/D4h/D7h/D8h
250	300	D2h/D4h/D7h/D8h
315	350	D2h/D4h/D7h/D8h
355	400	E1h/E3h
400	400	E1h/E3h
500	500	E1h/E3h
560	600	E1h/E3h
630	650	E2h/E4h
710	750	E2h/E4h

Table 4.2 Enclosure Power Ratings, 525–690 V

1) All power ratings are taken at high overload.
Output is measured at 690 V (kW) and 575 V (hp).

 Danfoss A/S © 01/2018 All rights reserved.

4

4.3 Overview of Enclosures, 380–500 V

Enclosure size	D1h	D2h	D3h	D4h	D5h	D6h	D7h	D8h
Power rating[1]								
Output at 400 V (kW)	90–132	160–250	90–132	160–250	90–132	90–132	160–250	160–250
Output at 460 V (hp)	125–200	250–350	125–200	250–350	125–200	125–200	250–350	250–350
Protection rating								
IP	IP21/54	IP21/54	IP20	IP20	IP21/54	IP21/54	IP21/54	IP21/54
NEMA	Type 1/12	Type 1/12	Type Chassis	Type Chassis	Type 1/12	Type 1/12	Type 1/12	Type 1/12
Hardware options[2]								
Stainless steel back channel	O	O	O	O	O	O	O	O
Mains shielding	O	O	–	–	O	O	O	O
Space heater	O	O	–	–	O	O	O	O
RFI filter (Class A1)	O	O	O	O	O	O	O	O
Safe torque off	S	S	S	S	S	S	S	S
No LCP	O	O	O	O	O	O	O	O
Numerical LCP	O	O	O	O	O	O	O	O
Graphical LCP	O	O	O	O	O	O	O	O
Fuses	O	O	O	O	O	O	O	O
Heat sink access[3]	O	O	O	O	O	O	O	O
Brake chopper	–	–	O	O	O	O	O	O
Regeneration terminals	–	–	O	O	O	O	O	O
Loadshare terminals	–	–	O	O	–	–	–	–
Fuses + loadshare	–	–	O	O	–	–	–	–
Disconnect	–	–	–	–	–	O	–	O
Circuit breakers	–	–	–	–	–	O	–	O
Contactors	–	–	–	–	–	O	–	O
24 V DC supply	O	O	O	O	O	O	O	O
Dimensions								
Height, mm (in)	901 (35.5)	1107 (43.6)	909 (35.8) 1004 (39.5)[4]	1027 (40.4) 1027 (40.4)[4]	1324 (52.1)	1663 (65.5)	1978 (77.9)	2284 (89.9)
Width, mm (in)	325 (12.8)	325 (12.8)	250 (9.8)	375 (14.8)	325 (12.8)	325 (12.8)	420 (16.5)	420 (16.5)
Depth, mm (in)	379 (14.9)	379 (14.9)	375 (14.8)	375 (14.8)	381 (15.0)	381 (15.0)	386 (15.2)	406 (16.0)
Weight, kg (lb)	62 (137)	125 (276)	62 (137) 108 (238)[4]	125 (276) 179 (395)[4]	99 (218)	128 (282)	185 (408)	232 (512)

Table 4.3 D1h–D8h Drives, 380–500 V

1) All power ratings are taken at high overload. Output is measured at 400 V (kW) and 460 V (hp).

2) S = standard, O = optional, and a dash indicates that the option is unavailable.

3) Heat sink access is not available with stainless steel back-channel option.

4) With optional load share and regen terminals.

 Danfoss A/S © 01/2018 All rights reserved.

Enclosure size	E1h	E2h	E3h	E4h
Power rating[1)]				
Output at 400 V (kW)	315–400	450–500	315–400	450–500
Output at 460 V (hp)	450–550	600–650	450–550	600–650
Protection rating				
IP	IP21/54	IP21/54	IP20[2)]	IP20[2)]
UL type	Type 1/12	Type 1/12	Chassis	Chassis
Hardware options[3)]				
Stainless steel back channel	O	O	O	O
Mains shielding	O	O	–	–
Space heater	O	O	–	–
RFI filter (Class A1)	O	O	O	O
Safe torque off	S	S	S	S
No LCP	O	O	O	O
Graphical LCP	O	O	O	O
Fuses	S	S	O	O
Heat sink access	O	O	O	O
Brake chopper	O	O	O	O
Regen terminals	O	O	O	O
Load share terminals	–	–	O	O
Fuses + load share	–	–	O	O
Disconnect	O	O	–	–
Circuit breakers	–	–	–	–
Contactors	–	–	–	–
24 V DC supply (SMPS, 5 A)	–	–	–	–
Dimensions				
Height, mm (in)	2043 (80.4)	2043 (80.4)	1578 (62.1)	1578 (62.1)
Width, mm (in)	602 (23.7)	698 (27.5)	506 (19.9)	604 (23.9)
Depth, mm (in)	513 (20.2)	513 (20.2)	482 (19.0)	482 (19.0)
Weight, kg (lb)	295 (650)	318 (700)	272 (600)	295 (650)

Table 4.4 E1h–E4h Drives, 380–500 V

1) All power ratings are taken at high overload. Output is measured at 400 V (kW) and 460 V (hp).

2) If the enclosure is configured with load share or regen terminals, then the protection rating is IP00, otherwise the protection rating is IP20.

3) S = standard, O = optional, and a dash indicates that the option is unavailable.

 Danfoss A/S © 01/2018 All rights reserved.

4

4.4 Overview of Enclosures, 525–690 V

Enclosure size	D1h	D2h	D3h	D4h	D5h	D6h	D7h	D8h
Power rating[1]								
Output at 690 V (kW)	55–132	160–315	55–132	160–315	55–132	55–132	160–315	160–315
Output at 575 V (hp)	60–150	200–350	60–150	200–350	60–150	60–150	200–350	200–350
Protection rating								
IP	IP21/54	IP21/54	IP20	IP20	IP21/54	IP21/54	IP21/54	IP21/54
NEMA	Type 1/12	Type 1/12	Type Chassis	Type Chassis	Type 1/12	Type 1/12	Type 1/12	Type 1/12
Hardware options[2]								
Stainless steel back-channel	–	–	O	O	–	–	–	–
Mains shielding	O	O	O	O	O	O	O	O
Space heater	O	O	O	O	O	O	O	O
Safe torque off	S	S	S	S	S	S	S	S
No LCP	O	O	O	O	O	O	O	O
Numerical LCP	O	O	O	O	O	O	O	O
Graphical LCP	O	O	O	O	O	O	O	O
Fuses	O	O	O	O	O	O	O	O
Heat sink access[3]	O	O	O	O	O	O	O	O
Brake chopper	–	–	O	O	O	O	O	XO
Regeneration terminals	–	–	O	O	–	–	–	–
Loadshare terminals	–	–	O	O	O	O	O	O
Fuses + loadshare	–	–	O	O	–	–	–	–
Disconnect	–	–	–	–	O	O	O	O
Circuit breakers	–	–	–	–	–	O	–	O
Contactors	–	–	–	–	–	O	–	O
24 V DC supply	O	O	O	O	O	O	O	O
Dimensions								
Height, mm (in)	901 (35.5)	1107 (43.6)	909 (35.8) 1004 (39.5)[4]	1027 (40.4) 1027 (40.4)[4]	1324 (52.1)	1663 (65.5)	1978 (77.9)	2284 (89.9)
Width, mm (in)	325 (12.8)	325 (12.8)	250 (9.8)	375 (14.8)	325 (12.8)	325 (12.8)	420 (16.5)	420 (16.5)
Depth, mm (in)	379 (14.9)	379 (14.9)	375 (14.8)	375 (14.8)	381 (15.0)	381 (15.0)	386 (15.2)	406 (16.0)
Weight, kg (lb)	62 (137)	125 (276)	62 (137) 108 (238)[4]	125 (276) 179 (395)[4]	99 (218)	128 (282)	185 (408)	232 (512)

Table 4.5 D1h–D8h Drives, 525–690 V

1) All power ratings are taken at high overload. Output is measured at 690 V (kW) and 575 V (hp).

2) S = standard, O = optional, and a dash indicates that the option is unavailable.

3) Heat sink access is not available with stainless steel back-channel option.

4) With optional load share and regen terminals.

 Danfoss A/S © 01/2018 All rights reserved.

Enclosure size	E1h	E2h	E3h	E4h
Power rating[1]				
Output at 690 V (kW)	355–560	630–710	355–560	630–710
Output at 575 V (hp)	400–600	650–750	400–600	650–750
Protection rating				
IP	IP21/54	IP21/54	IP20[2]	IP20[2]
UL type	Type 1/12	Type 1/12	Chassis	Chassis
Hardware options[3]				
Stainless steel back channel	O	O	O	O
Mains shielding	O	O	–	–
Space heater	O	O	–	–
RFI filter (Class A1)	–	–	–	–
Safe torque off	S	S	S	S
No LCP	O	O	O	O
Graphical LCP	O	O	O	O
Fuses	S	S	O	O
Heat sink access	O	O	O	O
Brake chopper	O	O	O	O
Regen terminals	O	O	O	O
Load share terminals	–	–	O	O
Fuses + load share	–	–	O	O
Disconnect	O	O	–	–
Circuit breakers	–	–	–	–
Contactors	–	–	–	–
24 V DC supply (SMPS, 5 A)	–	–	–	–
Dimensions				
Height, mm (in)	2043 (80.4)	2043 (80.4)	1578 (62.1)	1578 (62.1)
Width, mm (in)	602 (23.7)	698 (27.5)	506 (19.9)	604 (23.9)
Depth, mm (in)	513 (20.2)	513 (20.2)	482 (19.0)	482 (19.0)
Weight, kg (lb)	295 (650)	318 (700)	272 (600)	295 (650)

Table 4.6 E1h–E4h Drives, 525–690 V

1) All power ratings are taken at high overload. Output is measured at 690 V (kW) and 575 V (hp).

2) If the enclosure is configured with load share or regen terminals, then the protection rating is IP00, otherwise the protection rating is IP20.

3) S = standard, O = optional, and a dash indicates that the option is unavailable.

 Danfoss A/S © 01/2018 All rights reserved.

4

4.5 Kit Availability

Kit description[1)]	D1h	D2h	D3h	D4h	D5h	D6h	D7h	D8h	E1h	E2h	E3h	E4h
NEMA 3R outdoor weather shield	O	O	–	–	–	–	–	–	–	–	–	–
NEMA 3R protection for in-back/out-back cooling kit	–	–	O	O	–	–	–	–	–	–	–	–
USB in door	O	O	O	O	O	O	O	O	S	S	–	–
LCP, numerical	O	O	O	O	O	O	O	O	O	O	O	O
LCP, graphical[2)]	O	O	O	O	O	O	O	O	O	O	O	O
LCP cable, 3 m (9 ft)	O	O	O	O	O	O	O	O	O	O	O	O
Mounting kit for numerical LCP (LCP, fasteners, gasket, and cable)	O	O	O	O	O	O	O	O	O	O	O	O
Mounting kit for graphical LCP (LCP, fasteners, gasket, and cable)	O	O	O	O	O	O	O	O	O	O	O	O
Mounting kit for all LCPs (fasteners, gasket, and cable)	O	O	O	O	O	O	O	O	O	O	O	O
Mains shield	–	–	–	–	–	–	–	–	O	O	–	–
Grounding bar	–	–	–	–	–	–	–	–	O	O	–	–
Input plate option	O	O	O	O	O	O	O	O	–	–	–	–
Terminal blocks	O	O	O	O	O	O	O	O	O	O	O	O
Top entry for fieldbus cables	O	O	O	O	O	O	O	O	O	O	O	O
Pedestal	O	O	–	–	O	O	O	O	S	S	–	–
In bottom/out-top cooling	–	–	O	O	–	–	–	–	–	–	O	O
In bottom/out-back cooling	O	O	O	O	–	–	–	–	–	–	O	O
In back/out-top cooling	–	–	–	–	–	–	–	–	–	–	O	O
In back/out-back cooling	O	O	O	O	O	O	O	O	O	O	O	O
Out top (only) cooling	–	–	O	O	–	–	–	–	–	–	–	–

Table 4.7 Available Kits for Enclosures D1h–D8h and E1h–E4h

1) S = standard, O = optional, and a dash indicates that the kit is unavailable for that enclosure. For kit descriptions and part numbers, see chapter 13.2.6 Ordering Numbers for D1h–D8h Kits and chapter 13.2.7 Ordering Numbers for E1h–E4h Kits.

2) The graphical LCP comes standard with enclosures D1h–D8h and E1h–E4h. If more than 1 graphical LCP is required, the kit is available for purchase.

 Danfoss A/S © 01/2018 All rights reserved.

5 Product Features

5.1 Automated Operational Features

Automated operational features are active when the drive is operating. Most of them require no programming or set-up. The drive has a range of built-in protection functions to protect itself and the motor when it runs.

For details of any set-up required, in particular motor parameters, refer to the *programming guide*.

5.1.1 Short-circuit Protection

Motor (phase-to-phase)
The drive is protected against short circuits on the motor side by current measurement in each of the 3 motor phases. A short circuit between 2 output phases causes an overcurrent in the inverter. The inverter is turned off when the short circuit current exceeds the allowed value (*Alarm 16, Trip Lock*).

Mains side
A drive that works correctly limits the current it can draw from the supply. Still, it is recommended to use fuses and/or circuit breakers on the supply side as protection if there is component break-down inside the drive (1st fault). Mains side fuses are mandatory for UL compliance.

NOTICE

To ensure compliance with IEC 60364 for CE or NEC 2009 for UL, it is mandatory to use fuses and/or circuit breakers.

Brake resistor
The drive is protected from a short circuit in the brake resistor.

Load sharing
To protect the DC bus against short circuits and the drives from overload, install DC fuses in series with the load sharing terminals of all connected units.

5.1.2 Overvoltage Protection

Motor-generated overvoltage
The voltage in the DC link is increased when the motor acts as a generator. This situation occurs in following cases:

- The load rotates the motor at constant output frequency from the drive, that is, the load generates energy.
- During deceleration (ramp-down) if the inertia moment is high, the friction is low, and the ramp-down time is too short for the energy to be dissipated as a loss throughout the drive system.
- Incorrect slip compensation setting causing higher DC-link voltage.
- Back EMF from PM motor operation. If coasted at high RPM, the PM motor back EMF can potentially exceed the maximum voltage tolerance of the drive and cause damage. To help prevent this situation, the value of *parameter 4-19 Max Output Frequency* is automatically limited based on an internal calculation based on the value of *parameter 1-40 Back EMF at 1000 RPM*, *parameter 1-25 Motor Nominal Speed*, and *parameter 1-39 Motor Poles*.

NOTICE

To avoid motor overspeeds (for example, due to excessive windmilling effects), equip the drive with a brake resistor.

The overvoltage can be handled either using a brake function (*parameter 2-10 Brake Function*) and/or using overvoltage control (*parameter 2-17 Over-voltage Control*).

Brake functions
Connect a brake resistor for dissipation of surplus brake energy. Connecting a brake resistor allows a higher DC-link voltage during braking.

AC brake is an alternative to improving braking without using a brake resistor. This function controls an over-magnetization of the motor when the motor is acting as a generator. Increasing the electrical losses in the motor allows the OVC function to increase the braking torque without exceeding the overvoltage limit.

NOTICE

AC brake is not as effective as dynamic braking with a resistor.

Overvoltage control (OVC)
By automatically extending the ramp-down time, OVC reduces the risk of the drive tripping due to an overvoltage on the DC-link.

NOTICE

OVC can be activated for a PM motor with all control core, PM VVC+, Flux OL, and Flux CL for PM Motors.

NOTICE

Do not enable OVC in hoisting applications.

 Danfoss A/S © 01/2018 All rights reserved.

5

5.1.3 Missing Motor Phase Detection

The missing motor phase function (*parameter 4-58 Missing Motor Phase Function*) is enabled by default to avoid motor damage if a motor phase is missing. The default setting is 1000 ms, but it can be adjusted for faster detection.

5.1.4 Supply Voltage Imbalance Detection

Operation under severe supply voltage imbalance reduces the lifetime of the motor and drive. If the motor is operated continuously near nominal load, conditions are considered severe. The default setting trips the drive if there is supply voltage imbalance (*parameter 14-12 Response to Mains Imbalance*).

5.1.5 Switching on the Output

Adding a switch to the output between the motor and the drive is allowed, however fault messages can appear. Danfoss does not recommend using this feature for 525–690 V drives connected to an IT mains network.

5.1.6 Overload Protection

Torque limit
The torque limit feature protects the motor against overload, independent of the speed. Torque limit is controlled in *parameter 4-16 Torque Limit Motor Mode* and *parameter 4-17 Torque Limit Generator Mode*. The time before the torque limit warning trips is controlled in *parameter 14-25 Trip Delay at Torque Limit*.

Current limit
The current limit is controlled in *parameter 4-18 Current Limit*, and the time before the drive trips is controlled in *parameter 14-24 Trip Delay at Current Limit*.

Speed limit
Minimum speed limit: *Parameter 4-11 Motor Speed Low Limit [RPM]* or *parameter 4-12 Motor Speed Low Limit [Hz]* limit the minimum operating speed range of the drive. Maximum speed limit: *Parameter 4-13 Motor Speed High Limit [RPM]* or *parameter 4-19 Max Output Frequency* limit the maximum output speed the drive can provide.

Electronic thermal relay (ETR)
ETR is an electronic feature that simulates a bimetal relay based on internal measurements. The characteristic is shown in *Illustration 5.1*.

Voltage limit
The inverter turns off to protect the transistors and the DC link capacitors when a certain hard-coded voltage level is reached.

Overtemperature
The drive has built-in temperature sensors and reacts immediately to critical values via hard-coded limits.

5.1.7 Locked Rotor Protection

There can be situations when the rotor is locked due to excessive load or other factors. The locked rotor cannot produce enough cooling, which in turn can overheat the motor winding. The drive is able to detect the locked rotor situation with open-loop PM flux control and PM VVC$^+$ control (*parameter 30-22 Locked Rotor Protection*).

5.1.8 Automatic Derating

The drive constantly checks for the following critical levels:

- High temperature on the control card or heat sink.
- High motor load.
- High DC-link voltage.
- Low motor speed.

As a response to a critical level, the drive adjusts the switching frequency. For high internal temperatures and low motor speed, the drive can also force the PWM pattern to SFAVM.

NOTICE

The automatic derating is different when *parameter 14-55 Output Filter* is set to *[2] Sine-Wave Filter Fixed*.

5.1.9 Automatic Energy Optimization

Automatic energy optimization (AEO) directs the drive to monitor the load on the motor continuously and adjust the output voltage to maximize efficiency. Under light load, the voltage is reduced and the motor current is minimized. The motor benefits from:

- Increased efficiency.
- Reduced heating.
- Quieter operation.

There is no need to select a V/Hz curve because the drive automatically adjusts motor voltage.

5.1.10 Automatic Switching Frequency Modulation

The drive generates short electrical pulses to form an AC wave pattern. The switching frequency is the rate of these pulses. A low switching frequency (slow pulsing rate) causes audible noise in the motor, making a higher switching frequency preferable. A high switching frequency, however, generates heat in the drive that can limit the amount of current available to the motor.

Automatic switching frequency modulation regulates these conditions automatically to provide the highest switching

 Danfoss A/S © 01/2018 All rights reserved.

frequency without overheating the drive. By providing a regulated high switching frequency, it quiets motor operating noise at slow speeds, when audible noise control is critical, and produces full output power to the motor when required.

5.1.11 Automatic Derating for High Switching Frequency

The drive is designed for continuous, full-load operation at switching frequencies between 1.5–2 kHz for 380–500 V, and 1–1.5 kHz for 525–690 V. The frequency range depends on power size and voltage rating. A switching frequency exceeding the maximum allowed range generates increased heat in the drive and requires the output current to be derated.

An automatic feature of the drive is load-dependent switching frequency control. This feature allows the motor to benefit from as high a switching frequency as the load allows.

5.1.12 Power Fluctuation Performance

The drive withstands mains fluctuations such as:

- Transients.
- Momentary drop-outs.
- Short voltage drops.
- Surges.

The drive automatically compensates for input voltages ±10% from the nominal to provide full rated motor voltage and torque. With auto restart selected, the drive automatically powers up after a voltage trip. With flying start, the drive synchronizes to motor rotation before start.

5.1.13 Resonance Damping

Resonance damping eliminates the high-frequency motor resonance noise. Automatic or manually selected frequency damping is available.

5.1.14 Temperature-controlled Fans

Sensors in the drive regulate the operation of the internal cooling fans. Often, the cooling fans do not run during low load operation, or when in sleep mode or standby. These sensors reduce noise, increase efficiency, and extend the operating life of the fan.

5.1.15 EMC Compliance

Electromagnetic interference (EMI) and radio frequency interference (RFI) are disturbances that can affect an electrical circuit due to electromagnetic induction or radiation from an external source. The drive is designed to comply with the EMC product standard for drives IEC 61800-3 and the European standard EN 55011. Motor cables must be shielded and properly terminated to comply with the emission levels in EN 55011. For more information regarding EMC performance, see *chapter 10.14.1 EMC Test Results*.

5.1.16 Galvanic Isolation of Control Terminals

All control terminals and output relay terminals are galvanically isolated from mains power, which completely protects the controller circuitry from the input current. The output relay terminals require their own grounding. This isolation meets the stringent protective extra-low voltage (PELV) requirements for isolation.

The components that make up the galvanic isolation are:

- Supply, including signal isolation.
- Gatedrive for the IGBTs, trigger transformers, and optocouplers.
- The output current Hall effect transducers.

5.2 Custom Application Features

Custom application functions are the most common features programmed in the drive for enhanced system performance. They require minimum programming or set-up. See the *programming guide* for instructions on activating these functions.

5.2.1 Automatic Motor Adaptation

Automatic motor adaptation (AMA) is an automated test procedure used to measure the electrical characteristics of the motor. AMA provides an accurate electronic model of the motor, allowing the drive to calculate optimal performance and efficiency. Running the AMA procedure also maximizes the automatic energy optimization feature of the drive. AMA is performed without the motor rotating and without uncoupling the load from the motor.

5.2.2 Built-in PID Controller

The built-in proportional, integral, derivative (PID) controller eliminates the need for auxiliary control devices. The PID controller maintains constant control of closed-loop systems where regulated pressure, flow, temperature, or other system requirements must be maintained.

The drive can use 2 feedback signals from 2 different devices, allowing the system to be regulated with different feedback requirements. The drive makes control decisions

 Danfoss A/S © 01/2018 All rights reserved.

by comparing the 2 signals to optimize system performance.

5.2.3 Motor Thermal Protection

Motor thermal protection can be provided via:

- Direct temperature sensing using a
  - PTC- or KTY sensor in the motor windings and connected on a standard AI or DI.
  - PT100 or PT1000 in the motor windings and motor bearings, connected on VLT® Sensor Input Card MCB 114.
  - PTC Thermistor input on VLT® PTC Thermistor Card MCB 112 (ATEX approved).
- Mechanical thermal switch (Klixon type) on a DI.
- Built-in electronic thermal relay (ETR).

ETR calculates motor temperature by measuring current, frequency, and operating time. The drive shows the thermal load on the motor in percentage and can issue a warning at a programmable overload setpoint. Programmable options at the overload allow the drive to stop the motor, reduce output, or ignore the condition. Even at low speeds, the drive meets I2t Class 20 electronic motor overload standards.

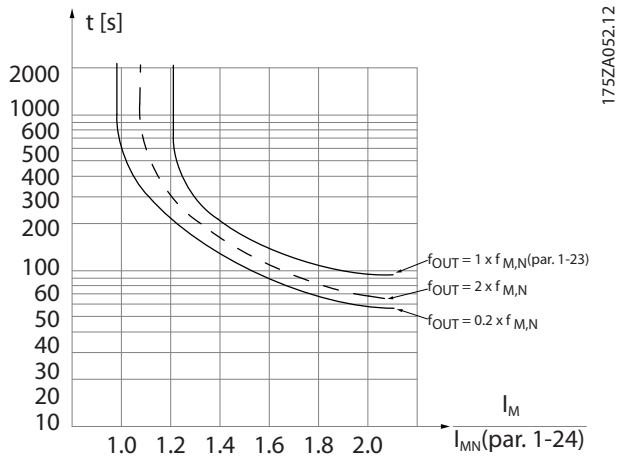

Illustration 5.1 ETR Characteristics

The X-axis shows the ratio between I_{motor} and I_{motor} nominal. The Y-axis shows the time in seconds before the ETR cuts off and trips the drive. The curves show the characteristic nominal speed, at twice the nominal speed and at 0.2 x the nominal speed.
At lower speed, the ETR cuts off at lower heat due to less cooling of the motor. In that way, the motor is protected from being overheated even at low speed. The ETR feature calculates the motor temperature based on actual current and speed. The calculated temperature is visible as a readout parameter in *parameter 16-18 Motor Thermal*.
A special version of the ETR is also available for EX-e motors in ATEX areas. This function makes it possible to enter a specific curve to protect the Ex-e motor. See the *programming guide* for set-up instructions.

5.2.4 Motor Thermal Protection for Ex-e Motors

The drive is equipped with an ATEX ETR thermal monitoring function for operation of Ex-e motors according to EN-60079-7. When combined with an ATEX approved PTC monitoring device such as the VLT® PTC Thermistor Card MCB 112 option or an external device, the installation does not require an individual approval from an approbated organization.

The ATEX ETR thermal monitoring function enables use of an Ex-e motor instead of a more expensive, larger, and heavier Ex-d motor. The function ensures that the drive limits motor current to prevent overheating.

Requirements related to the Ex-e motor

- Ensure that the Ex-e motor is approved for operation in hazardous zones (ATEX zone 1/21, ATEX zone 2/22) with drives. The motor must be certified for the specific hazardous zone.
- Install the Ex-e motor in zone 1/21 or 2/22 of the hazardous zone, according to motor approval.

NOTICE

Install the drive outside the hazardous zone.

- Ensure that the Ex-e motor is equipped with an ATEX-approved motor overload protection device. This device monitors the temperature in the motor windings. If there is a critical temperature level or a malfunction, the device switches off the motor.
  - The VLT® PTC Thermistor Card MCB 112 option provides ATEX-approved monitoring of motor temperature. It is a prerequisite that the drive is equipped with 3–6 PTC thermistors in series according to DIN 44081 or 44082.
  - Alternatively, an external ATEX-approved PTC protection device can be used.
- Sine-wave filter is required when
  - Long cables (voltage peaks) or increased mains voltage produce voltages

 Danfoss A/S © 01/2018 All rights reserved.

exceeding the maximum allowable voltage at motor terminals.

- Minimum switching frequency of the drive does not meet the requirement stated by the motor manufacturer. The minimum switching frequency of the drive is shown as the default value in *parameter 14-01 Switching Frequency*.

Compatibility of motor and drive

For motors certified according to EN-60079-7, a data list including limits and rules is supplied by the motor manufacturer as a data sheet, or on the motor nameplate. During planning, installation, commissioning, operation, and service, follow the limits and rules supplied by the manufacturer for:

- Minimum switching frequency.
- Maximum current.
- Minimum motor frequency.
- Maximum motor frequency.

Illustration 5.2 shows where the requirements are indicated on the motor nameplate.

When matching drive and motor, Danfoss specifies the following extra requirements to ensure adequate motor thermal protection:

- Do not exceed the maximum allowed ratio between drive size and motor size. The typical value is $I_{VLT,\,n} \leq 2 x I_{m,n}$
- Consider all voltage drops from drive to motor. If the motor runs with lower voltage than listed in the U/f characteristics, current can increase, triggering an alarm.

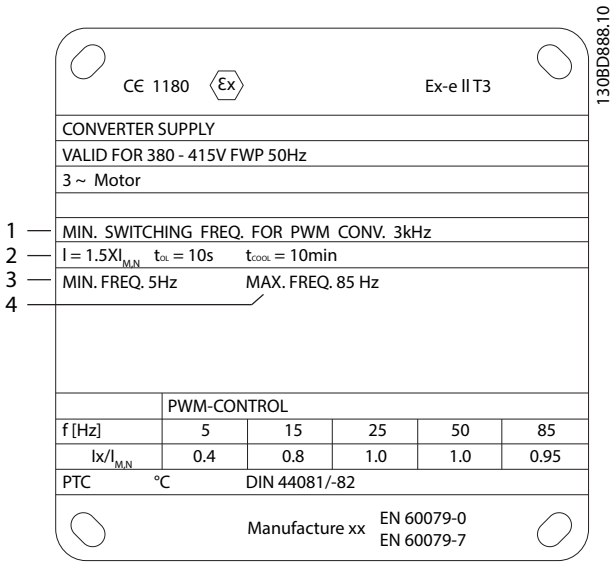

1	Minimum switching frequency
2	Maximum current
3	Minimum motor frequency
4	Maximum motor frequency

Illustration 5.2 Motor Nameplate showing Drive Requirements

For further information, see the application example in *chapter 12 Application Examples*.

5.2.5 Mains Drop-out

During a mains drop-out, the drive keeps running until the DC-link voltage drops below the minimum stop level. The minimum stop level is typically 15% below the lowest rated supply voltage. The mains voltage before the drop-out and the motor load determines how long it takes for the drive to coast.

The drive can be configured (*parameter 14-10 Mains Failure*) to different types of behavior during mains drop-out:

- Trip lock once the DC link is exhausted.
- Coast with flying start whenever mains return (*parameter 1-73 Flying Start*).
- Kinetic back-up.
- Controlled ramp down.

Flying start

This selection makes it possible to catch a motor that is spinning freely due to a mains drop-out. This option is relevant for centrifuges and fans.

Kinetic back-up

This selection ensures that the drive runs as long as there is energy in the system. For short mains drop-out, the operation is restored after mains return, without bringing

 Danfoss A/S © 01/2018 All rights reserved.

the application to a stop or losing control at any time. Several variants of kinetic back-up can be selected.

Configure the behavior of the drive at mains drop-out in *parameter 14-10 Mains Failure* and *parameter 1-73 Flying Start*.

5.2.6 Automatic Restart

The drive can be programmed to restart the motor automatically after a minor trip, such as momentary power loss or fluctuation. This feature eliminates the need for manual resetting, and enhances automated operation for remotely controlled systems. The number of restart attempts and the duration between attempts can be limited.

5.2.7 Full Torque at Reduced Speed

The drive follows a variable V/Hz curve to provide full motor torque even at reduced speeds. Full output torque can coincide with the maximum designed operating speed of the motor. This drive differs from variable torque drives and constant torque drives. Variable torque drives provide reduced motor torque at low speed. Constant torque drives provide excess voltage, heat, and motor noise at less than full speed.

5.2.8 Frequency Bypass

In some applications, the system can have operational speeds that create a mechanical resonance. This mechanical resonance can generate excessive noise and possibly damage mechanical components in the system. The drive has 4 programmable bypass-frequency bandwidths. The bandwidths allow the motor to step over speeds that induce system resonance.

5.2.9 Motor Preheat

To preheat a motor in a cold or damp environment, a small amount of DC current can be trickled continuously into the motor to protect it from condensation and cold starts. This function can eliminate the need for a space heater.

5.2.10 Programmable Set-ups

The drive has 4 set-ups that can be independently programmed. Using multi-setup, it is possible to switch between independently programmed functions activated by digital inputs or a serial command. Independent set-ups are used, for example, to change references, or for day/night or summer/winter operation, or to control multiple motors. The LCP shows the active set-up.

Set-up data can be copied from drive to drive by downloading the information from the removable LCP.

5.2.11 Smart Logic Control (SLC)

Smart logic control (SLC) is a sequence of user-defined actions (see *parameter 13-52 SL Controller Action* [x]) executed by the SLC when the associated user-defined event (see *parameter 13-51 SL Controller Event* [x]) is evaluated as TRUE by the SLC.
The condition for an event can be a particular status, or that the output from a logic rule or a comparator operand becomes TRUE. The condition leads to an associated action as shown in *Illustration 5.3*.

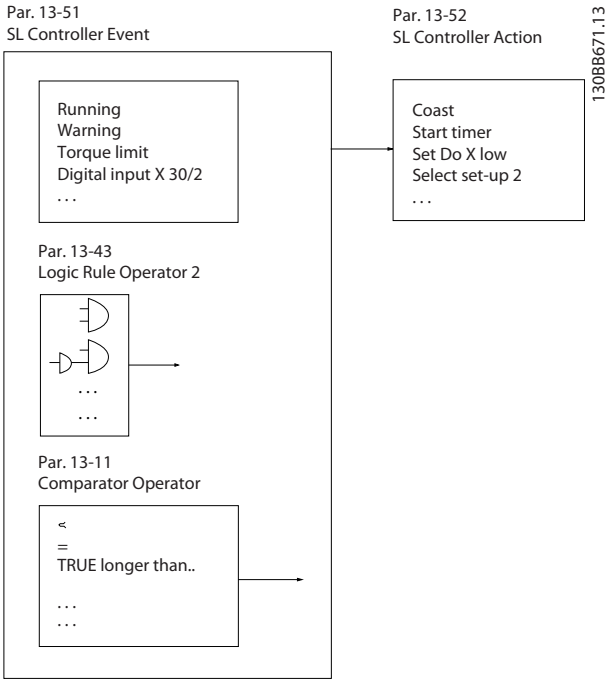

Illustration 5.3 SLC Event and Action

Events and actions are each numbered and linked in pairs (states), which means that when event [0] is fulfilled (attains the value TRUE), action [0] is executed. After the 1st action is executed, the conditions of the next event are evaluated. If this event is evaluated as true, then the corresponding action is executed. Only 1 event is evaluated at any time. If an event is evaluated as false, nothing happens in the SLC during the current scan interval and no other events are evaluated. When the SLC starts, it only evaluates event [0] during each scan interval. Only when event [0] is evaluated as true, the SLC executes action [0] and starts evaluating the next event. It is possible to program 1–20 events and actions.

 Danfoss A/S © 01/2018 All rights reserved.

When the last event/action has been executed, the sequence starts over again from event [0]/action [0]. *Illustration 5.4* shows an example with 4 event/actions:

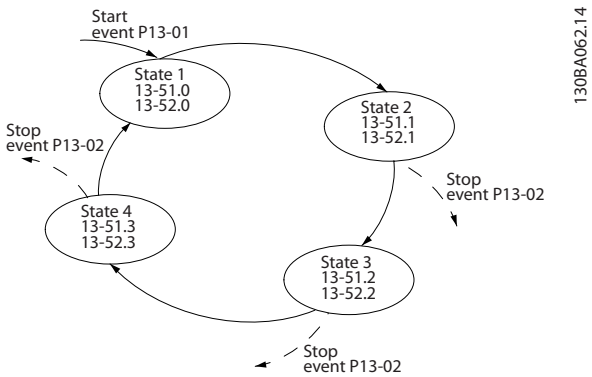

Illustration 5.4 Order of Execution when 4 Events/Actions are Programmed

Comparators

Comparators are used for comparing continuous variables (output frequency, output current, analog input, and so on) to fixed preset values.

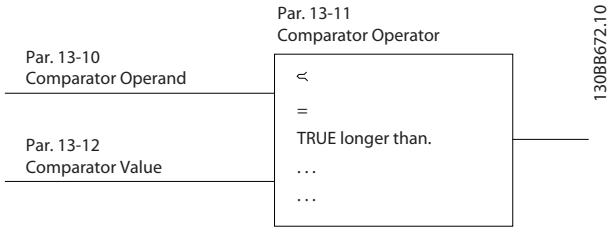

Illustration 5.5 Comparators

Logic rules

Combine up to 3 boolean inputs (TRUE/FALSE inputs) from timers, comparators, digital inputs, status bits, and events using the logical operators AND, OR, and NOT.

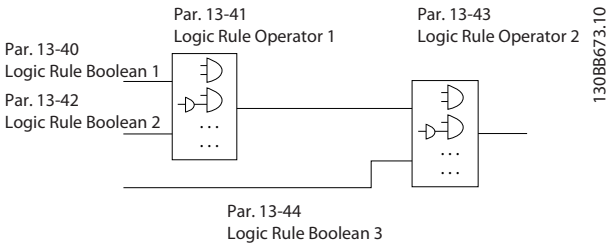

Illustration 5.6 Logic Rules

5.2.12 Safe Torque Off

The Safe Torque Off (STO) function is used to stop the drive in emergency stop situations.

For more information about Safe Torque Off, including installation and commissioning, refer to the *Safe Torque Off Operating Guide*.

Liability conditions

The customer is responsible for ensuring that personnel know how to install and operate the safe torque off function by:

- Reading and understanding the safety regulations concerning health, safety, and accident prevention.
- Understanding the generic and safety guidelines provided in the *Safe Torque Off Operating Guide*.
- Having a good knowledge of the generic and safety standards for the specific application.

5.3 Dynamic Braking Overview

Dynamic braking slows the motor using 1 of the following methods:

- AC brake
  The brake energy is distributed in the motor by changing the loss conditions in the motor (*parameter 2-10 Brake Function* = [2]). The AC brake function cannot be used in applications with high cycling frequency since this situation overheats the motor.
- DC brake
  An overmodulated DC current added to the AC current works as an eddy current brake (*parameter 2-02 DC Braking Time* ≠ 0 s).
- Resistor brake
  A brake IGBT keeps the overvoltage under a certain threshold by directing the brake energy from the motor to the connected brake resistor (*parameter 2-10 Brake Function* = [1]). For more information on selecting a brake resistor, see *VLT® Brake Resistor MCE 101 Design Guide*.

For drives equipped with the brake option, a brake IGBT along with terminals 81(R-) and 82(R+) are included for connecting an external brake resistor.

The function of the brake IGBT is to limit the voltage in the DC link whenever the maximum voltage limit is exceeded. It limits the voltage by switching the externally mounted resistor across the DC bus to remove excess DC voltage present on the bus capacitors.

External brake resistor placement has the advantages of selecting the resistor based on application need, dissipating the energy outside of the control panel, and protecting the drive from overheating if the brake resistor is overloaded.

 Danfoss A/S © 01/2018 All rights reserved.

The brake IGBT gate signal originates on the control card and is delivered to the brake IGBT via the power card and gatedrive card. Also, the power and control cards monitor the brake IGBT for a short circuit. The power card also monitors the brake resistor for overloads.

5.4 Mechanical Holding Brake Overview

A mechanical holding brake is an external piece of equipment mounted directly on the motor shaft that performs static braking. Static braking is when a brake is used to clamp down on the motor after the load has been stopped. A holding brake is either controlled by a PLC or directly by a digital output from the drive.

NOTICE

A drive cannot provide a safe control of a mechanical brake. A redundancy circuitry for the brake control must be included in the installation.

5.4.1 Mechanical Brake Using Open-loop Control

For hoisting applications, typically it is necessary to control an electromagnetic brake. A relay output (relay 1 or relay 2) or a programmed digital output (terminal 27 or 29) is required. Normally, this output must be closed for as long as the drive is unable to hold the motor. In *parameter 5-40 Function Relay* (array parameter), *parameter 5-30 Terminal 27 Digital Output*, or *parameter 5-31 Terminal 29 Digital Output*, select *[32] mechanical brake control* for applications with an electromagnetic brake.

When *[32] mechanical brake control* is selected, the mechanical brake relay remains closed during start until the output current is above the level selected in *parameter 2-20 Release Brake Current*. During stop, the mechanical brake closes when the speed is below the level selected in *parameter 2-21 Activate Brake Speed [RPM]*. If the drive is brought into an alarm condition, such as an overvoltage situation, the mechanical brake immediately cuts in. The mechanical brake also cuts in during safe torque off.

Consider the following when using the electromagnetic brake:

- Use any relay output or digital output (terminal 27 or 29). If necessary, use a contactor.
- Ensure that the output is switched off as long as the drive is unable to rotate the motor. Examples include the load being too heavy or the motor not being mounted.
- Before connecting the mechanical brake, select *[32] Mechanical brake control* in *parameter group 5-4* Relays* (or in *parameter group 5-3* Digital Outputs*).
- The brake is released when the motor current exceeds the preset value in *parameter 2-20 Release Brake Current*.
- The brake is engaged when the output frequency is less than the frequency set in *parameter 2-21 Activate Brake Speed [RPM]* or *parameter 2-22 Activate Brake Speed [Hz]* and only if the drive carries out a stop command.

NOTICE

For vertical lifting or hoisting applications, ensure that the load can be stopped if there is an emergency or a malfunction. If the drive is in alarm mode or in an overvoltage situation, the mechanical brake cuts in.

For hoisting applications, make sure that the torque limits in *parameter 4-16 Torque Limit Motor Mode* and *parameter 4-17 Torque Limit Generator Mode* are set lower than the current limit in *parameter 4-18 Current Limit*. It is also recommended to set *parameter 14-25 Trip Delay at Torque Limit* to 0, *parameter 14-26 Trip Delay at Inverter Fault* to 0, and *parameter 14-10 Mains Failure* to *[3] Coasting*.

 Danfoss A/S © 01/2018 All rights reserved.

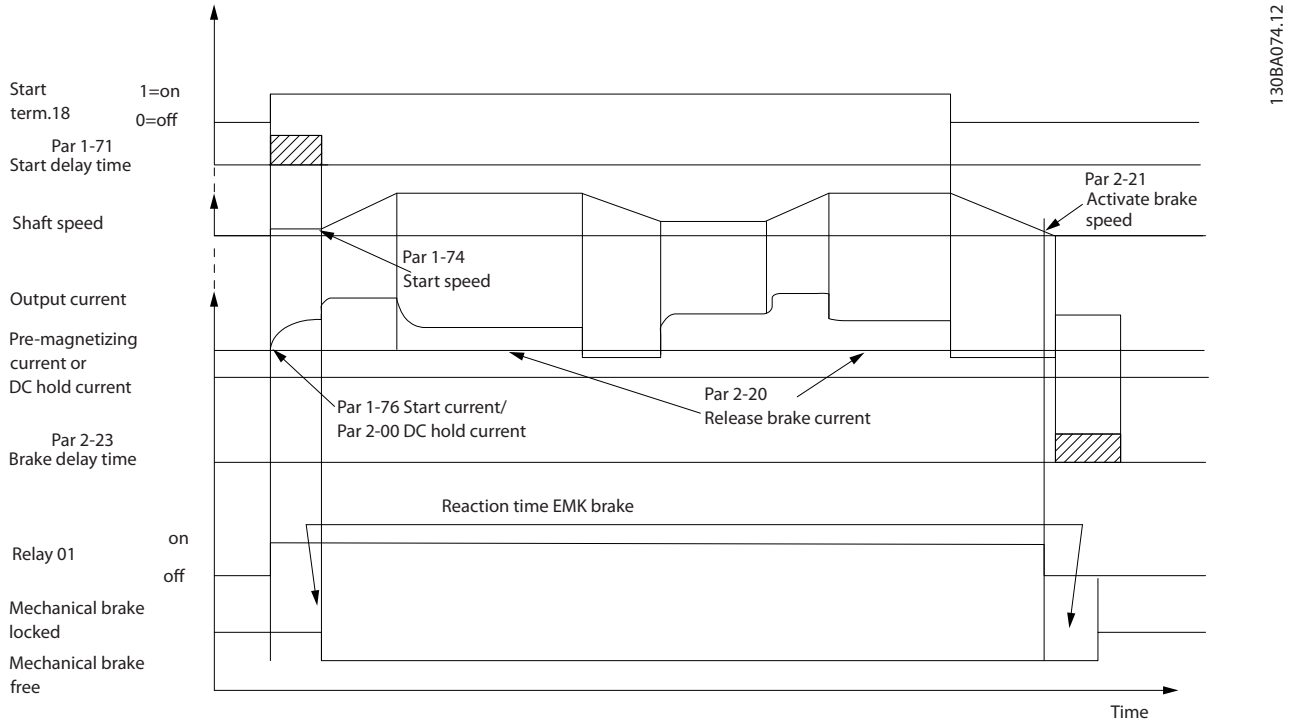

Illustration 5.7 Mechanical Brake Control in Open Loop

5.4.2 Mechanical Brake Using Closed-loop Control

The VLT® AutomationDrive FC 302 features a mechanical brake control designed for hoisting applications and supports the following functions:

- 2 channels for mechanical brake feedback, offering protection against unintended behavior resulting from a broken cable.
- Monitoring the mechanical brake feedback throughout the complete cycle. Monitoring helps protect the mechanical brake - especially if more drives are connected to the same shaft.
- No ramp up until feedback confirms that the mechanical brake is open.
- Improved load control at stop.
- The transition when motor takes over the load from the brake can be configured.

Parameter 1-72 Start Function [6] Hoist Mech. Brake Rel activates the hoist mechanical brake. The main difference compared to the regular mechanical brake control is that the hoist mechanical brake function has direct control over the brake relay. Instead of setting a current to release the brake, the torque applied against the closed brake before release is defined. Because the torque is defined directly, the set-up is more straightforward for hoisting applications.

The hoist mechanical brake strategy is based on the following 3-step sequence, where motor control and brake release are synchronized to obtain the smoothest possible brake release.

1. Pre-magnetize the motor.
   To ensure that there is a hold on the motor and to verify that it is mounted correctly, the motor is first pre-magnetized.
2. Apply torque against the closed brake.

 Danfoss A/S © 01/2018 All rights reserved.

When the load is held by the mechanical brake, its size cannot be determined, only its direction. The moment the brake opens, the motor must take over the load. To facilitate the takeover, a user-defined torque (*parameter 2-26 Torque Ref*) is applied in the hoisting direction. This process is used to initialize the speed controller that finally takes over the load. To reduce wear on the gearbox due to backlash, the torque is ramped up.

3. Release the brake.
   When the torque reaches the value set in *parameter 2-26 Torque Ref*, the brake is released. The value set in *parameter 2-25 Brake Release Time* determines the delay before the load is released. To react as quickly as possible on the load-step that follows after brake release, the speed-PID control can be boosted by increasing the proportional gain.

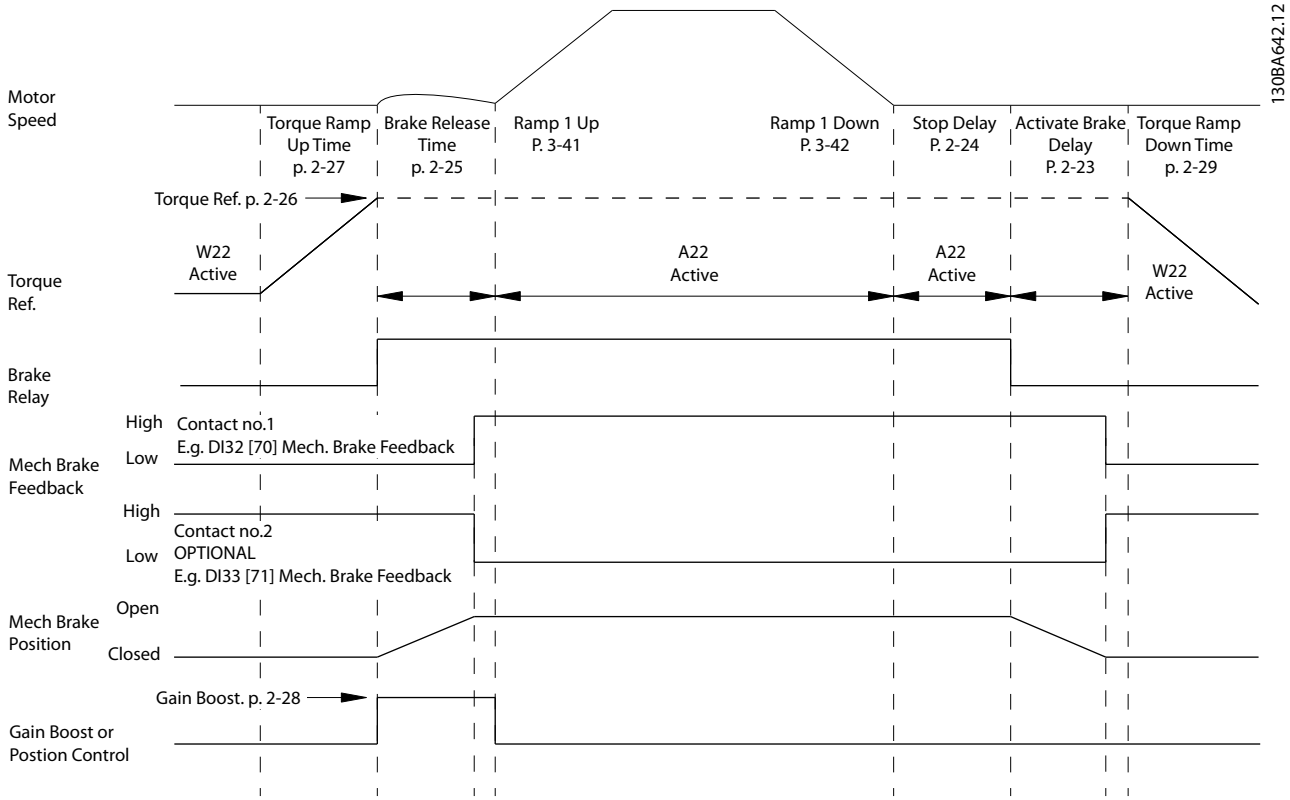

Illustration 5.8 Brake Release Sequence for Hoist Mechanical Brake Control

Parameter 2-26 Torque Ref to *parameter 2-33 Speed PID Start Lowpass Filter Time* are only available for the hoist mechanical brake control (flux with motor feedback). *Parameter 2-30 Position P Start Proportional Gain* to *parameter 2-33 Speed PID Start Lowpass Filter Time* can be set up for smooth transition change from speed control to position control during *parameter 2-25 Brake Release Time* - the time when the load is transferred from the mechanical brake to the drive. *Parameter 2-30 Position P Start Proportional Gain* to *parameter 2-33 Speed PID Start Lowpass Filter Time* are activated when *parameter 2-28 Gain Boost Factor* is set to 0. See *Illustration 5.8* for more information.

NOTICE

For an example of advanced mechanical brake control for hoisting applications, see *chapter 12 Application Examples*.

 Danfoss A/S © 01/2018 All rights reserved.

5.5 Load Share Overview

Load share is a feature that allows the connection of DC circuits of several drives, creating a multiple-drive system to run 1 mechanical load. Load share provides the following benefits:

Energy savings
A motor running in regenerative mode can supply drives that are running in motoring mode.

Reduced need for spare parts
Usually, only 1 brake resistor is needed for the entire drive system instead of 1 brake resistor for per drive.

Power back-up
If there is mains failure, all linked drives can be supplied through the DC link from a back-up. The application can continue running or go though a controlled shutdown process.

Preconditions
The following preconditions must be met before load sharing is considered:

- The drive must be equipped with load sharing terminals.
- Product series must be the same. Use only VLT® AutomationDrive FC 302 drives with other VLT® AutomationDrive FC 302 drives.
- Drives must be placed physically close to one another to allow the wiring between them to be no longer than 25 m (82 ft).
- Drives must have the same voltage rating.
- When adding a brake resistor in a load sharing configuration, all drives must be equipped with a brake chopper.
- Fuses must be added to load share terminals.

For a diagram of a load share application in which best practices are applied, see *Illustration 5.9*.

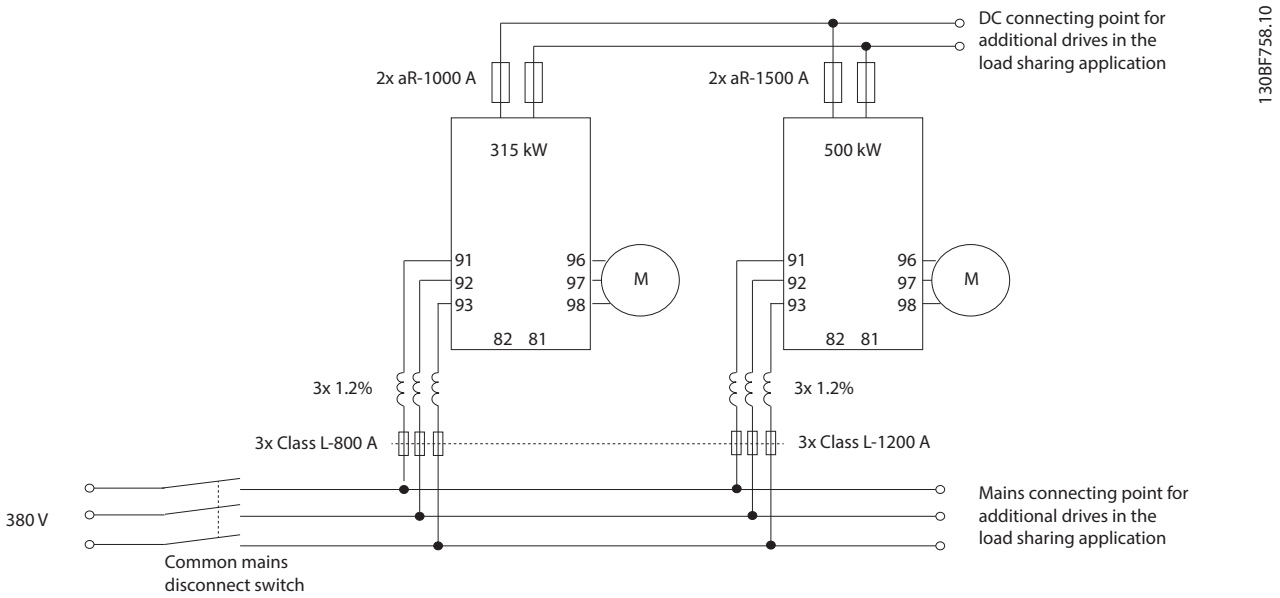

Illustration 5.9 Diagram of a Load Share Application Where Best Practices are Applied

 Danfoss A/S © 01/2018 All rights reserved.

Load sharing
Units with the built-in load sharing option contain terminals (+) 89 DC and (–) 88 DC. Within the drive, these terminals connect to the DC bus in front of the DC-link reactor and bus capacitors.

The load sharing terminals can connect in 2 different configurations.

- Terminals tie the DC-bus circuits of multiple drives together. This configuration allows a unit that is in a regenerative mode to share its excess bus voltage with another unit that is running a motor. Load sharing in this manner can reduce the need for external dynamic brake resistors, while also saving energy. The number of units that can be connected in this way is infinite, as long as each unit has the same voltage rating. In addition, depending on the size and number of units, it may be necessary to install DC reactors and DC fuses in the DC-link connections, and AC reactors on the mains. Attempting such a configuration requires specific considerations.
- The drive is powered exclusively from a DC source. This configuration requires:
  - A DC source.
  - A means to soft charge the DC bus at power-up.

5.6 Regen Overview

Regen typically occurs in applications with continuous braking such as cranes/hoists, downhill conveyors, and centrifuges where energy is pulled out of a decelerated motor.

The excess energy is removed from the drive using 1 of the following options:

- Brake chopper allows the excess energy to be dissipated in the form of heat within the brake resistor coils.
- Regen terminals allow a third-party regen unit to be connected to the drive, allowing the excess energy to be returned to the power grid.

Returning excess energy back to the power grid is the most efficient use of regenerated energy in applications using continuous braking.

 Danfoss A/S © 01/2018 All rights reserved.

5.7 Back-channel Cooling Overview

A unique back-channel duct passes cooling air over the heat sinks with minimal air passing through the electronics area. There is an IP54/Type 12 seal between the back-channel cooling duct and the electronics area of the VLT® drive. This back-channel cooling allows 90% of the heat losses to be exhausted directly outside the enclosure. This design improves reliability and prolongs component life by dramatically reducing interior temperatures and contamination of the electronic components. Different back-channel cooling kits are available to redirect the airflow based on individual needs.

5.7.1 Airflow for D1h–D8h Enclosures

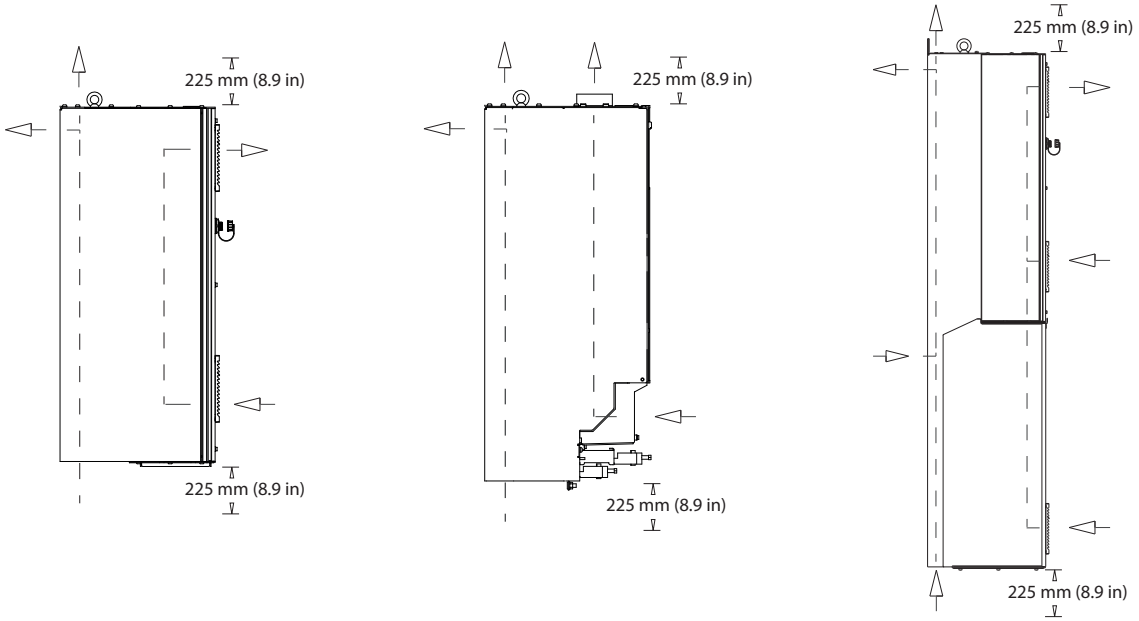

Illustration 5.10 Standard Airflow Configuration for Enclosures D1h/D2h (Left), D3h/D4h (Center), and D5h–D8h (Right).

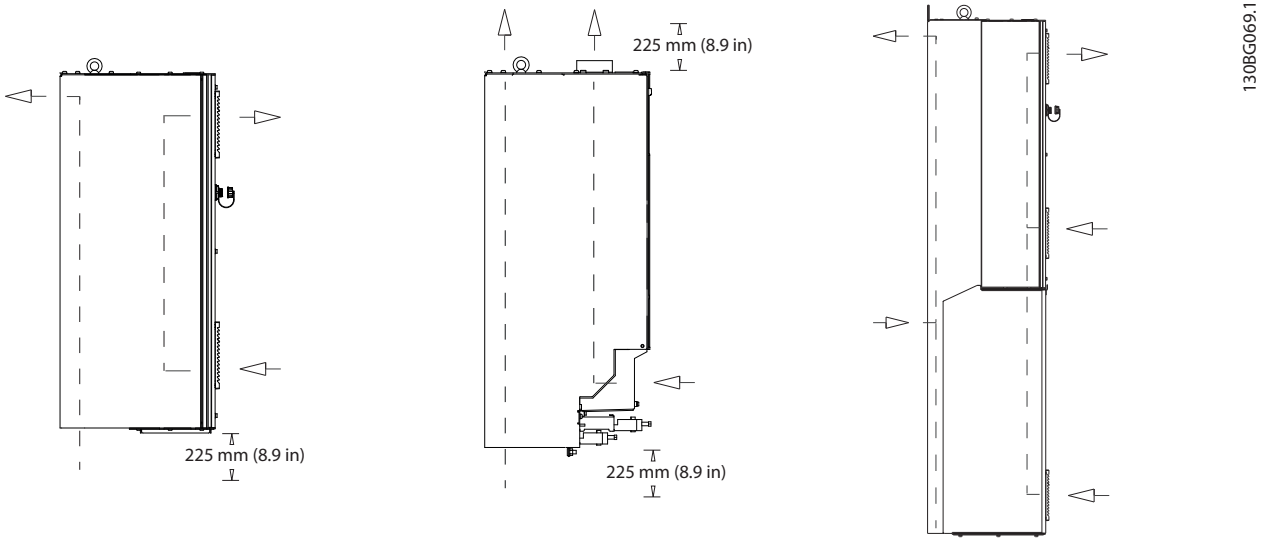

Illustration 5.11 Optional Airflow Configuration Using Back-channel Cooling Kits for Enclosures D1h–D8h.
(Left) In-bottom/out-back cooling kit for enclosures D1h/D2h.
(Center) In-bottom/out-top cooling kit for enclosures D3h/D4h.
(Right) In-back/out-back cooling kit for enclosures D5–D8h.

 Danfoss A/S © 01/2018 All rights reserved.

5.7.2 Airflow for E1h–E4h Enclosures

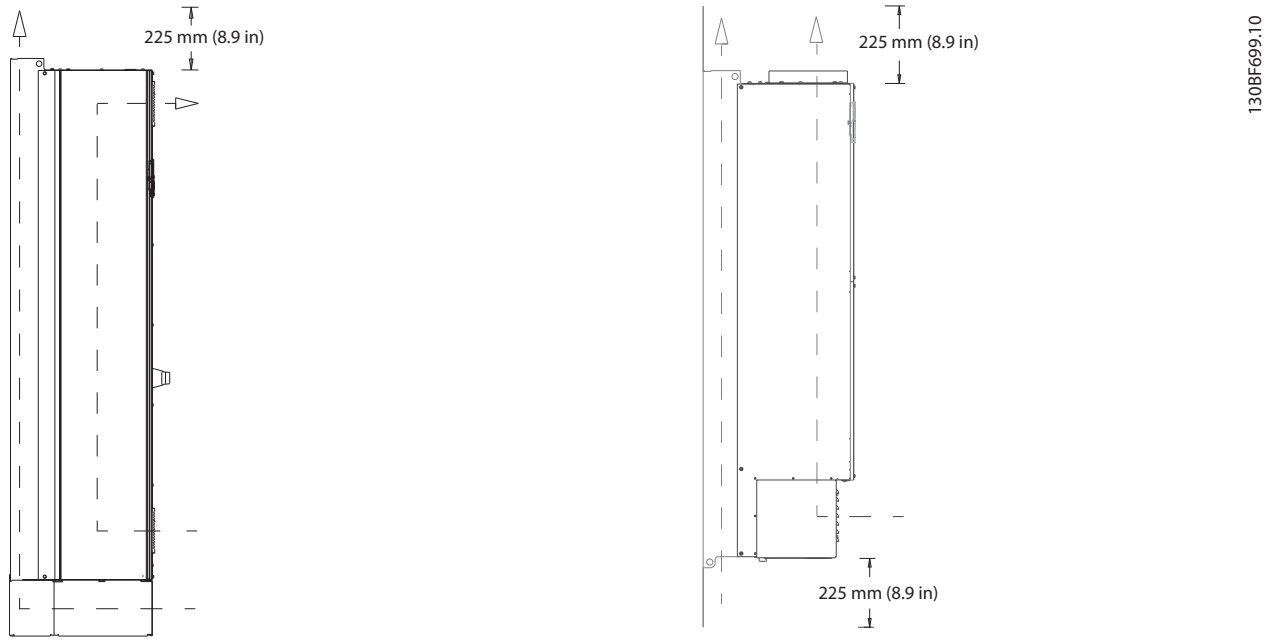

Illustration 5.12 Standard Airflow Configuration for E1h/E2h (Left) and E3h/E4h (Right)

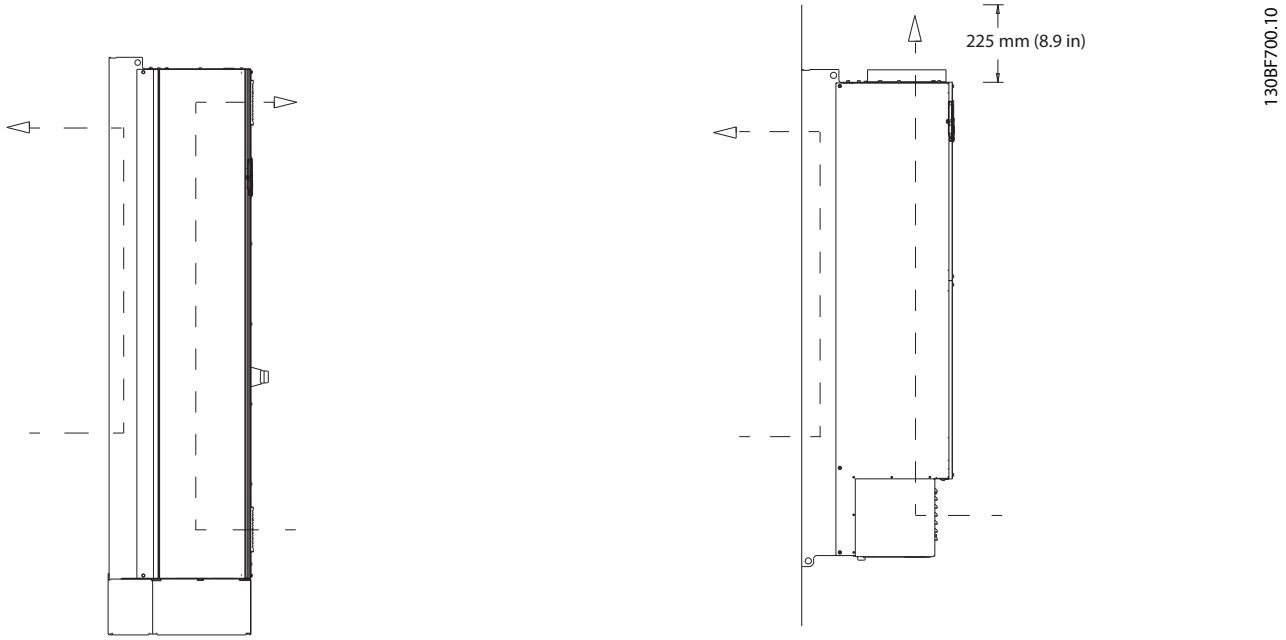

Illustration 5.13 Optional Airflow Configuration Through the Back Wall for E1h/E2h (Left) and E3h/E4h (Right)

Danfoss A/S © 01/2018 All rights reserved.

6 Options and Accessories Overview

6.1 Fieldbus Devices

This section describes the fieldbus devices that are available with the VLT® AutomationDrive FC 302 series. Using a fieldbus device reduces system cost, delivers faster and more efficient communication, and provides an easier user interface. For ordering numbers, refer to *chapter 13.2 Ordering Numbers for Options and Accessories*.

6.1.1 VLT® PROFIBUS DP-V1 MCA 101

The VLT® PROFIBUS DP-V1 MCA 101 provides:

- Wide compatibility, a high level of availability, support for all major PLC vendors, and compatibility with future versions.
- Fast, efficient communication, transparent installation, advanced diagnosis, and parameterization and auto-configuration of process data via a GSD file.
- Acyclic parameterization using PROFIBUS DP-V1, PROFIdrive, or Danfoss FC profile state machines.

6.1.2 VLT® DeviceNet MCA 104

The VLT® DeviceNet MCA 104 provides:

- Support of the ODVA AC drive profile supported via I/O instance 20/70 and 21/71 secures compatibility to existing systems.
- Benefits from ODVA's strong conformance testing policies that ensure products are interoperable.

6.1.3 VLT® CAN Open MCA 105

The MCA 105 option provides:

- Standardized handling.
- Interoperability.
- Low cost.

This option is fully equipped with both high-priority access to control the drive (PDO communication) and to access all parameters through acyclic data (SDO communication).

For interoperability, the option uses the DSP 402 AC drive profile.

6.1.4 VLT® PROFIBUS Converter MCA 113

The MCA 113 option is a special version of the PROFIBUS options that emulates the VLT® 3000 commands in the VLT® AutomationDrive FC 302.

The VLT® 3000 can be replaced by the VLT® AutomationDrive FC 302, or an existing system can be expanded without costly change of the PLC program. For upgrade to a different fieldbus, the installed converter can be removed and replaced with a new option. The MCA 113 option secures the investment without losing flexibility.

6.1.5 VLT® PROFIBUS Converter MCA 114

The MCA 114 option is a special version of the PROFIBUS options that emulates the VLT® 5000 commands in the VLT® AutomationDrive FC 302. This option supports DP-V1.

The VLT® 5000 can be replaced by the VLT® AutomationDrive FC 302, or an existing system can be expanded without costly change of the PLC program. For upgrade to a different fieldbus, the installed converter can be removed and replaced with a new option. The MCA 114 option secures the investment without losing flexibility.

6.1.6 VLT® PROFINET MCA 120

The VLT® PROFINET MCA 120 combines the highest performance with the highest degree of openness. The option is designed so that many of the features from the VLT® PROFIBUS MCA 101 can be reused, minimizing user effort to migrate PROFINET and securing the investment in a PLC program.

- Same PPO types as the VLT® PROFIBUS DP V1 MCA 101 for easy migration to PROFINET.
- Built-in web server for remote diagnosis and reading out of basic drive parameters.
- Supports MRP.
- Supports DP-V1. Diagnostic allows easy, fast, and standardized handling of warning and fault information into the PLC, improving bandwidth in the system.
- Supports PROFIsafe when combined with VLT® Safety Option MCB 152.
- Implementation in accordance with Conformance Class B.

 Danfoss A/S © 01/2018 All rights reserved.

6.1.7 VLT® EtherNet/IP MCA 121

Ethernet is the future standard for communication at the factory floor. The VLT® EtherNet/IP MCA 121 is based on the newest technology available for industrial use and handles even the most demanding requirements. EtherNet/IP™ extends standard commercial Ethernet to the Common Industrial Protocol (CIP™) – the same upper-layer protocol and object model found in DeviceNet.

This option offers advanced features such as:

- Built-in, high-performance switch enabling line-topology, which eliminates the need for external switches.
- DLR Ring (from October 2015).
- Advanced switch and diagnosis functions.
- Built-in web server.
- E-mail client for service notification.
- Unicast and Multicast communication.

6.1.8 VLT® Modbus TCP MCA 122

The VLT® Modbus TCP MCA 122 connects to Modbus TCP-based networks. It handles connection intervals down to 5 ms in both directions, positioning it among the fastest performing Modbus TCP devices in the market. For master redundancy, it features hot swapping between 2 masters.

Other features include:

- Built-in web-server for remote diagnosis and reading out basic drive parameters.
- Email notification that can be configured to send an email message to 1 or more recipients when certain alarms or warnings occur, or when they are cleared.
- Dual master PLC connection for redundancy.

6.1.9 VLT® POWERLINK MCA 123

The MCA 123 option represents the 2nd generation of fieldbus. The high bit rate of industrial Ethernet can now be used to make the full power of IT technologies used in the automation world available for the factory world.

This fieldbus option provides high performance, real-time, and time synchronization features. Due to its CANopen-based communication models, network management, and device description model, it offers a fast communication network and the following features:

- Dynamic motion control applications.
- Material handling.
- Synchronization and positioning applications.

6.1.10 VLT® EtherCAT MCA 124

The MCA 124 option offers connectivity to EtherCAT® based networks via the EtherCAT Protocol.

The option handles the EtherCAT line communication in full speed, and connection towards the drive with an interval down to 4 ms in both directions, allowing the MCA 124 to participate in networks ranging from low performance up to servo applications.

- EoE Ethernet over EtherCAT support.
- HTTP (hypertext transfer protocol) for diagnosis via built-in web server.
- CoE (CAN over Ethernet) for access to drive parameters.
- SMTP (simple mail transfer protocol) for e-mail notification.
- TCP/IP for easy access to drive configuration data from MCT 10.

6.2 Functional Extensions

This section describes the functional extension options that are available with the VLT® AutomationDrive FC 302 series. For ordering numbers, refer to *chapter 13.2 Ordering Numbers for Options and Accessories*.

6.2.1 VLT® General Purpose I/O Module MCB 101

The VLT® General Purpose I/O Module MCB 101 offers an extended number of control inputs and outputs:

- 3 digital inputs 0–24 V: Logic 0 < 5 V; Logic 1 > 10 V.
- 2 analog inputs 0–10 V: Resolution 10 bits plus sign.
- 2 digital outputs NPN/PNP push-pull.
- 1 analog output 0/4–20 mA.
- Spring-loaded connection.

6.2.2 VLT® Encoder Input MCB 102

The MCB 102 option offers the possibility to connect various types of incremental and absolute encoders. The connected encoder can be used for closed-loop speed control and closed-loop flux motor control.

The following encoder types are supported:

- 5 V TTL (RS 422)
- 1VPP SinCos
- SSI

 Danfoss A/S © 01/2018 All rights reserved.

- HIPERFACE
- EnDat

6.2.3 VLT® Resolver Option MCB 103

The MCB 103 option enables connection of a resolver to provide speed feedback from the motor.

- Primary voltage: 2–8 V_{rms}
- Primary frequency: 2.0–15 kHz
- Primary maximum current: 50 mA rms
- Secondary input voltage: 4 V_{rms}
- Spring-loaded connection

6.2.4 VLT® Relay Card MCB 105

The VLT® Relay Card MCB 105 extends relay functions with 3 more relay outputs.

- Protects control cable connection.
- Spring-loaded control wire connection.

Maximum switch rate (rated load/minimum load)
6 $minutes^{-1}$/20 s^{-1}.

Maximum terminal load
AC-1 resistive load: 240 V AC, 2 A.

6.2.5 VLT® Safe PLC Interface Option MCB 108

The MCB 108 option provides a safety input based on a single-pole 24 V DC input. For most applications, this input provides a way to implement safety in a cost-effective way.

For applications that work with more advanced products like Safety PLC and light curtains, the fail-safe PLC interface enables the connection of a 2-wire safety link. The PLC Interface allows the fail-safe PLC to interrupt on the plus or the minus link without interfering with the sense signal of the fail-safe PLC.

6.2.6 VLT® PTC Thermistor Card MCB 112

The MCB 112 option provides extra motor monitoring compared to the built-in ETR function and thermistor terminal.

- Protects the motor from overheating.
- ATEX-approved for use with Ex-d and Ex-e motors (EX-e only FC 302).
- Uses Safe Torque Off function, which is approved in accordance with SIL 2 IEC 61508.

6.2.7 VLT® Sensor Input Option MCB 114

The VLT® Sensor Input Option MCB 114 protects the motor from being overheated by monitoring the temperature of motor bearings and windings.

- 3 self-detecting sensor inputs for 2 or 3-wire PT100/PT1000 sensors.
- 1 extra analog input 4–20 mA.

6.2.8 VLT® Safety Option MCB 150 and MCB 151

MCB 150 and MCB 151 options expand the Safe Torque Off functions, which are integrated in a standard VLT® AutomationDrive FC 302. Use the Safe Stop 1 (SS1) function to perform a controlled stop before removing torque. Use the Safety-Limited Speed (SLS) function to monitor whether a specified speed is exceeded.

These options can be used up to PL d according to ISO 13849-1 and SIL 2 according to IEC 61508.

- Extra standard-compliant safety functions.
- Replacement of external safety equipment.
- Reduced space requirements.
- 2 safe programmable inputs.
- 1 safe output (for T37).
- Easier machine certification.
- Drive can be powered continuously.
- Safe LCP copy.
- Dynamic commissioning report.
- TTL (MCB 150) or HTL (MCB 151) encoder as speed feedback.

6.2.9 VLT® Safety Option MCB 152

The MCB 152 option activates Safe Torque Off via the PROFIsafe fieldbus with VLT® PROFINET MCA 120 fieldbus option. It improves flexibility by connecting safety devices within a plant.

The safety functions of the MCB 152 are implemented according to EN IEC 61800-5-2. The MCB 152 supports PROFIsafe functionality to activate integrated safety functions of the VLT® AutomationDrive FC 302 from any PROFIsafe host, up to Safety Integrity Level SIL 2 according to EN IEC 61508 and EN IEC 62061, and Performance Level PL d, Category 3 according to EN ISO 13849-1.

- PROFIsafe device (with MCA 120).
- Replacement of external safety equipment.

 Danfoss A/S © 01/2018 All rights reserved.

- 2 safe programmable inputs.
- Safe LCP copy.
- Dynamic commissioning report.

6.3 Motion Control and Relay Cards

This section describes the motion control and relay card options that are available with the VLT® AutomationDrive FC 302 series. For ordering numbers, refer to *chapter 13.2 Ordering Numbers for Options and Accessories*.

6.3.1 VLT® Motion Control Option MCO 305

The MCO 305 option is an integrated programmable motion controller that adds extra functionality for VLT® AutomationDrive FC 302.

The MCO 305 option offers easy-to-use motion functions combined with programmability – an ideal solution for positioning and synchronizing applications.

- Synchronization (electronic shaft), positioning, and electronic cam control.
- 2 separate interfaces supporting both incremental and absolute encoders.
- 1 encoder output (virtual master function).
- 10 digital inputs.
- 8 digital outputs.
- Supports CANopen motion bus, encoders, and I/O modules.
- Sends and receives data via fieldbus interface (requires fieldbus option).
- PC software tools for debugging and commissioning: Program and cam editor.
- Structured programming language with both cyclic and event-driven execution.

6.3.2 VLT® Synchronizing Controller MCO 350

The MCO 350 option for VLT® AutomationDrive FC 302 expands the functional properties of the AC drive in synchronizing applications and replaces traditional mechanical solutions.

- Speed synchronizing.
- Position (angle) synchronizing with or without marker correction.
- On-line adjustable gear ratio.
- On-line adjustable position (angle) offset.
- Encoder output with virtual master function for synchronization of multiple slaves.
- Control via I/Os or fieldbus.
- Home function.
- Configuration and readout of status and data via the LCP.

6.3.3 VLT® Positioning Controller MCO 351

The MCO 351 option offers a host of user-friendly benefits for positioning applications in many industries.

- Relative positioning.
- Absolute positioning.
- Touch-probe positioning.
- End-limit handling (software and hardware).
- Control via I/Os or fieldbus.
- Mechanical brake handling (programmable hold delay).
- Error handling.
- Jog speed/manual operation.
- Marker-related positioning.
- Home function.
- Configuration and readout of status and data via the LCP.

6.3.4 VLT® Extended Relay Card MCB 113

The VLT® Extended Relay Card MCB 113 adds inputs/outputs for increased flexibility.

- 7 digital inputs.
- 2 analog outputs.
- 4 SPDT relays.
- Meets NAMUR recommendations.
- Galvanic isolation capability.

6.4 Brake Resistors

In applications where the motor is used as a brake, energy is generated in the motor and sent back into the drive. If the energy cannot be transported back to the motor, it increases the voltage in the drive DC line. In applications with frequent braking and/or high inertia loads, this increase can lead to an overvoltage trip in the drive and, finally, a shutdown. Brake resistors are used to dissipate the excess energy resulting from the regenerative braking. The resistor is selected based on its ohmic value, its power dissipation rate, and its physical size. Danfoss offers a wide variety of different resistors that are specially designed to Danfoss drives. For ordering numbers and more information on how to dimension brake resistors, refer to the *VLT® Brake Resistor MCE 101 Design Guide*.

 Danfoss A/S © 01/2018 All rights reserved.

6.5 Sine-wave Filters

When a drive controls a motor, resonance noise is heard from the motor. This noise, which is the result of the motor design, occurs every time an inverter switch in the drive is activated. The frequency of the resonance noise thus corresponds to the switching frequency of the drive.

Danfoss supplies a sine-wave filter to dampen the acoustic motor noise. The filter reduces the ramp-up time of the voltage, the peak load voltage (U_{PEAK}), and the ripple current (ΔI) to the motor, which means that current and voltage become almost sinusoidal. The acoustic motor noise is reduced to a minimum.

The ripple current in the sine-wave filter coils also causes some noise. Solve the problem by integrating the filter in a cabinet or enclosure.

For ordering numbers and more information on sine-wave filters, refer to the *Output Filters Design Guide*.

6.6 dU/dt Filters

Danfoss supplies dU/dt filters which are differential mode, low-pass filters that reduce motor terminal phase-to-phase peak voltages and reduce the rise time to a level that lowers the stress on the insulation at the motor windings. This is a typical issue with set-ups using short motor cables.

Compared to sine-wave filters, the dU/dt filters have a cut-off frequency above the switching frequency.

For ordering numbers and more information on dU/dt filters, refer to the *Output Filters Design Guide*.

6.7 Common-mode Filters

High-frequency common-mode cores (HF-CM cores) reduce electromagnetic interference and eliminate bearing damage by electrical discharge. They are special nanocrystalline magnetic cores that have superior filtering performance compared to regular ferrite cores. The HF-CM core acts like a common-mode inductor between phases and ground.

Installed around the 3 motor phases (U, V, W), the common mode filters reduce high-frequency common-mode currents. As a result, high-frequency electromagnetic interference from the motor cable is reduced.

For ordering numbers refer to the *Output Filters Design Guide*.

6.8 Harmonic Filters

The *VLT® Advanced Harmonic Filters AHF 005 & AHF 010* should not be compared with traditional harmonic trap filters. The Danfoss harmonic filters have been specially designed to match the Danfoss drives.

By connecting the AHF 005 or AHF 010 in front of a Danfoss drive, the total harmonic current distortion generated back to the mains is reduced to 5% and 10%.

For ordering numbers and more information on how to dimension brake resistors, refer to the *VLT® Advanced Harmonic Filters AHF 005/AHF 010 Design Guide*.

6.9 High-power Kits

High-power kits, such as back-wall cooling, space heater, mains shield, are available. See *chapter 13.2 Ordering Numbers for Options and Accessories* for a brief description and ordering numbers for all available kits.

 Danfoss A/S © 01/2018 All rights reserved.

7 Specifications

7.1 Electrical Data, 380–500 V

VLT® AutomationDrive FC 302	N90K		N110		N132	
High/normal overload (High overload=150% current during 60 s, normal overload=110% current during 60 s)	**HO**	**NO**	**HO**	**NO**	**HO**	**NO**
Typical shaft output at 400 V [kW]	90	110	110	132	132	160
Typical shaft output at 460 V [hp]	125	150	150	200	200	250
Typical shaft output at 500 V [kW]	110	132	132	160	160	200
Enclosure size	**D1h/D3h/D5h/D6h**					
Output current (3-phase)						
Continuous (at 400 V) [A]	177	212	212	260	260	315
Intermittent (60 s overload) (at 400 V)[A]	266	233	318	286	390	347
Continuous (at 460/500 V) [A]	160	190	190	240	240	302
Intermittent (60 s overload) (at 460/500 V) [kVA]	240	209	285	264	360	332
Continuous kVA (at 400 V) [kVA]	123	147	147	180	180	218
Continuous kVA (at 460 V) [kVA]	127	151	151	191	191	241
Continuous kVA (at 500 V) [kVA]	139	165	165	208	208	262
Maximum input current						
Continuous (at 400 V) [A]	171	204	204	251	251	304
Continuous (at 460/500 V) [A]	154	183	183	231	231	291
Maximum number and size of cables per phase						
- Mains, motor, brake, and load share [mm^2 (AWG)]	2x95 (2x3/0)		2x95 (2x3/0)		2x95 (2x3/0)	
Maximum external mains fuses [A][1)]	315		350		400	
Estimated power loss at 400 V [W][2), 3)]	2031	2559	2289	2954	2923	3770
Estimated power loss at 460 V [W][2), 3)]	1828	2261	2051	2724	2089	3628
Efficiency[3)]	0.98		0.98		0.98	
Output frequency [Hz]	0–590		0–590		0–590	
Heat sink overtemperature trip [°C (°F)]	110 (230)		110 (230)		110 (230)	
Control card overtemperature trip [°C (°F)]	75 (167)		75 (167)		75 (167)	

Table 7.1 Electrical Data for Enclosures D1h/D3h/D5h/D6h, Mains Supply 3x380–500 V AC

1) For fuse ratings, see chapter 10.5 Fuses and Circuit Breakers.

2) Typical power loss is at normal conditions and expected to be within ±15% (tolerance relates to variety in voltage and cable conditions). These values are based on a typical motor efficiency (IE/IE3 border line). Lower efficiency motors add to the power loss in the drive. Applies for dimensioning of drive cooling. If the switching frequency is higher than the default setting, the power losses can increase. LCP and typical control card power consumptions are included. For power loss data according to EN 50598-2, refer to drives.danfoss.com/knowledge-center/energy-efficiency-directive/#/. Options and customer load can add up to 30 W to the losses, though usually a fully loaded control card and options for slots A and B each add only 4 W.

3) Measured using 5 m (16.4 ft) shielded motor cables at rated load and rated frequency. Efficiency measured at nominal current. For energy efficiency class, see chapter 10.11 Efficiency. For part load losses, see drives.danfoss.com/knowledge-center/energy-efficiency-directive/#/.

 Danfoss A/S © 01/2018 All rights reserved.

VLT® AutomationDrive FC 302	N160		N200		N250	
High/normal overload (High overload=150% current during 60 s, normal overload=110% current during 60 s)	**HO**	**NO**	**HO**	**NO**	**HO**	**NO**
Typical shaft output at 400 V [kW]	160	200	200	250	250	315
Typical shaft output at 460 V [hp]	250	300	300	350	350	450
Typical shaft output at 500 V [kW]	200	250	250	315	315	355
Enclosure size	**D2h/D4h/D7h/D8h**					
Output current (3-phase)						
Continuous (at 400 V) [A]	315	395	395	480	480	588
Intermittent (60 s overload) (at 400 V)[A]	473	435	593	528	720	647
Continuous (at 460/500 V) [A]	302	361	361	443	443	535
Intermittent (60 s overload) (at 460/500 V) [kVA]	453	397	542	487	665	589
Continuous kVA (at 400 V) [kVA]	218	274	274	333	333	407
Continuous kVA (at 460 V) [kVA]	241	288	288	353	353	426
Continuous kVA (at 500 V) [kVA]	262	313	313	384	384	463
Maximum input current						
Continuous (at 400 V) [A]	304	381	381	463	463	567
Continuous (at 460/500 V) [A]	291	348	348	427	427	516
Maximum number and size of cables per phase						
- Mains, motor, brake, and load share [mm^2 (AWG)]	2x185 (2x350 mcm)		2x185 (2x350 mcm)		2x185 (2x350 mcm)	
Maximum external mains fuses [A][1)]	550		630		800	
Estimated power loss at 400 V [W][2), 3)]	3093	4116	4039	5137	5005	6674
Estimated power loss at 460 V [W][2), 3)]	2872	3569	3575	4566	4458	5714
Efficiency[3)]	0.98		0.98		0.98	
Output frequency [Hz]	0–590		0–590		0–590	
Heat sink overtemperature trip [°C (°F)]	110 (230)		110 (230)		110 (230)	
Control card overtemperature trip [°C (°F)]	80 (176)		80 (176)		80 (176)	

Table 7.2 Electrical Data for Enclosures D2h/D4h/D7h/D8h, Mains Supply 3x380–500 V AC

1) For fuse ratings, see chapter 10.5 Fuses and Circuit Breakers.

2) Typical power loss is at normal conditions and expected to be within ±15% (tolerance relates to variety in voltage and cable conditions). These values are based on a typical motor efficiency (IE/IE3 border line). Lower efficiency motors add to the power loss in the drive. Applies for dimensioning of drive cooling. If the switching frequency is higher than the default setting, the power losses can increase. LCP and typical control card power consumptions are included. For power loss data according to EN 50598-2, refer to drives.danfoss.com/knowledge-center/energy-efficiency-directive/#/. Options and customer load can add up to 30 W to the losses, though usually a fully loaded control card and options for slots A and B each add only 4 W.

3) Measured using 5 m (16.4 ft) shielded motor cables at rated load and rated frequency. Efficiency measured at nominal current. For energy efficiency class, see chapter 10.11 Efficiency. For part load losses, see drives.danfoss.com/knowledge-center/energy-efficiency-directive/#/.

 Danfoss A/S © 01/2018 All rights reserved.

VLT® AutomationDrive FC 302	N315		N355		N400	
High/normal overload (High overload=150% current during 60 s, normal overload=110% current during 60 s)	**HO**	**NO**	**HO**	**NO**	**HO**	**NO**
Typical shaft output at 400 V [kW]	315	355	355	400	400	450
Typical shaft output at 460 V [hp]	450	500	500	600	550	600
Typical shaft output at 500 V [kW]	355	400	400	500	500	530
Enclosure size	**E1h/E3h**		**E1h/E3h**		**E1h/E3h**	
Output current (3-phase)						
Continuous (at 400 V) [A]	600	658	658	745	695	800
Intermittent (60 s overload) (at 400 V) [A]	900	724	987	820	1043	880
Continuous (at 460/500 V) [A]	540	590	590	678	678	730
Intermittent (60 s overload) (at 460/500 V) [A]	810	649	885	746	1017	803
Continuous kVA (at 400 V) [kVA]	416	456	456	516	482	554
Continuous kVA (at 460 V) [kVA]	430	470	470	540	540	582
Continuous kVA (at 500 V) [kVA]	468	511	511	587	587	632
Maximum input current						
Continuous (at 400 V) [A]	578	634	634	718	670	771
Continuous (at 460/500 V) [A]	520	569	569	653	653	704
Maximum number and size of cables per phase (E1h)						
- Mains and motor without brake [mm^2 (AWG)]	5x240 (5x500 mcm)		5x240 (5x500 mcm)		5x240 (5x500 mcm)	
- Mains and motor with brake [mm^2 (AWG)]	4x240 (4x500 mcm)		4x240 (4x500 mcm)		4x240 (4x500 mcm)	
- Brake or regen [mm^2 (AWG)]	2x185 (2x350 mcm)		2x185 (2x350 mcm)		2x185 (2x350 mcm)	
Maximum number and size of cables per phase (E3h)						
- Mains and motor [mm^2 (AWG)]	6x240 (6x500 mcm)		6x240 (6x500 mcm)		6x240 (6x500 mcm)	
- Brake [mm^2 (AWG)]	2x185 (2x350 mcm)		2x185 (2x350 mcm)		2x185 (2x350 mcm)	
- Load share or regen [mm^2 (AWG)]	4x185 (4x350 mcm)		4x185 (4x350 mcm)		4x185 (4x350 mcm)	
Maximum external mains fuses [A][1)]	800		800		800	
Estimated power loss at 400 V [W][2), 3)]	6178	6928	6851	8036	7297	8783
Estimated power loss at 460 V [W][2), 3)]	5322	5910	5846	6933	7240	7969
Efficiency[3)]	0.98		0.98		0.98	
Output frequency [Hz]	0–590		0–590		0–590	
Heat sink overtemperature trip [°C (°F)]	110 (230)		110 (230)		110 (230)	
Control card overtemperature trip [°C (°F)]	80 (176)		80 (176)		80 (176)	
Power card overtemperature trip [°C (°F)]	85 (185)		85 (185)		85 (185)	
Fan power card overtemperature trip [°C (°F)]	85 (185)		85 (185)		85 (185)	
Active in-rush card overtemperature trip [°C (°F)]	85 (185)		85 (185)		85 (185)	

Table 7.3 Electrical Data for Enclosures E1h/E3h, Mains Supply 3x380–500 V AC

1) For fuse ratings, see chapter 10.5 Fuses and Circuit Breakers.

2) Typical power loss is at normal conditions and expected to be within ±15% (tolerance relates to variety in voltage and cable conditions). These values are based on a typical motor efficiency (IE/IE3 border line). Lower efficiency motors add to the power loss in the drive. Applies for dimensioning of drive cooling. If the switching frequency is higher than the default setting, the power losses can increase. LCP and typical control card power consumptions are included. For power loss data according to EN 50598-2, refer to drives.danfoss.com/knowledge-center/energy-efficiency-directive/#/. Options and customer load can add up to 30 W to the losses, though usually a fully loaded control card and options for slots A and B each add only 4 W.

3) Measured using 5 m (16.4 ft) shielded motor cables at rated load and rated frequency. Efficiency measured at nominal current. For energy efficiency class, see chapter 10.11 Efficiency. For part load losses, see drives.danfoss.com/knowledge-center/energy-efficiency-directive/#/.

 Danfoss A/S © 01/2018 All rights reserved.

VLT® AutomationDrive FC 302	N450		N500	
High/normal overload (High overload=150% current during 60 s, normal overload=110% current during 60 s)	**HO**	**NO**	**HO**	**NO**
Typical shaft output at 400 V [kW]	450	500	500	560
Typical shaft output at 460 V [hp]	600	650	650	750
Typical shaft output at 500 V [kW]	530	560	560	630
Enclosure size	**E2h/E4h**		**E2h/E4h**	
Output current (3-phase)				
Continuous (at 400 V) [A]	800	880	880	990
Intermittent (60 s overload) (at 400 V) [A]	1200	968	1320	1089
Continuous (at 460/500 V) [A]	730	780	780	890
Intermittent (60 s overload) (at 460/500 V) [A]	1095	858	1170	979
Continuous kVA (at 400 V) [kVA]	554	610	610	686
Continuous kVA (at 460 V) [kVA]	582	621	621	709
Continuous kVA (at 500 V) [kVA]	632	675	675	771
Maximum input current				
Continuous (at 400 V) [A]	771	848	848	954
Continuous (at 460/500 V) [A]	704	752	752	858
Maximum number and size of cables per phase (E2h)				
- Mains and motor without brake [mm^2 (AWG)]	6x240 (6x500 mcm)		6x240 (6x500 mcm)	
- Mains and motor with brake [mm^2 (AWG)]	5x240 (5x500 mcm)		5x240 (5x500 mcm)	
- Brake or regen [mm^2 (AWG)]	2x185 (2x350 mcm)		2x185 (2x350 mcm)	
Maximum number and size of cables per phase (E4h)				
- Mains and motor [mm^2 (AWG)]	6x240 (6x500 mcm)		6x240 (6x500 mcm)	
- Brake [mm^2 (AWG)]	2x185 (2x350 mcm)		2x185 (2x350 mcm)	
- Load share or regen [mm^2 (AWG)]	4x185 (4x350 mcm)		4x185 (4x350 mcm)	
Maximum external mains fuses [A][1)]	1200		1200	
Estimated power loss at 400 V [W][2), 3)]	8352	9473	9449	11102
Estimated power loss at 460 V [W][2), 3)]	7182	7809	7771	9236
Efficiency[3)]	0.98		0.98	
Output frequency [Hz]	0–590		0–590	
Heat sink overtemperature trip [°C (°F)]	110 (230)		100 (212)	
Control card overtemperature trip [°C (°F)]	80 (176)		80 (176)	
Power card overtemperature trip [°C (°F)]	85 (185)		85 (185)	
Fan power card overtemperature trip [°C (°F)]	85 (185)		85 (185)	
Active in-rush card overtemperature trip [°C (°F)]	85 (185)		85 (185)	

Table 7.4 Electrical Data for Enclosures E2h/E4h, Mains Supply 3x380–500 V AC

1) For fuse ratings, see chapter 10.5 Fuses and Circuit Breakers.

2) Typical power loss is at normal conditions and expected to be within ±15% (tolerance relates to variety in voltage and cable conditions). These values are based on a typical motor efficiency (IE/IE3 border line). Lower efficiency motors add to the power loss in the drive. Applies for dimensioning of drive cooling. If the switching frequency is higher than the default setting, the power losses can increase. LCP and typical control card power consumptions are included. For power loss data according to EN 50598-2, refer to drives.danfoss.com/knowledge-center/energy-efficiency-directive/#/. Options and customer load can add up to 30 W to the losses, though usually a fully loaded control card and options for slots A and B each add only 4 W.

3) Measured using 5 m (16.4 ft) shielded motor cables at rated load and rated frequency. Efficiency measured at nominal current. For energy efficiency class, see chapter 10.11 Efficiency. For part load losses, see drives.danfoss.com/knowledge-center/energy-efficiency-directive/#/.

 Danfoss A/S © 01/2018 All rights reserved.

7.2 Electrical Data, 525–690 V

VLT® AutomationDrive FC 302	N55K		N75K		N90K		N110		N132	
High/normal overload (High overload=150% current during 60 s, normal overload=110% current during 60 s)	HO	NO	HO	NO	HO	NO	HO	NO	HO	NO
Typical shaft output at 525 V [kW]	45	55	55	75	75	90	90	110	110	132
Typical shaft output at 575 V [hp]	60	75	75	100	100	125	125	150	150	200
Typical shaft output at 690 V [kW]	55	75	75	90	90	110	110	132	132	160
Enclosure size	**D1h/D3h/D5h/D6h**									
Output current (3-phase)										
Continuous (at 525 V) [A]	76	90	90	113	113	137	137	162	162	201
Intermittent (60 s overload) (at 525 V) [A]	114	99	135	124	170	151	206	178	243	221
Continuous (at 575/690 V) [A]	73	86	86	108	108	131	131	155	155	192
Intermittent (60 s overload) (at 575/690 V) [A]	110	95	129	119	162	144	197	171	233	211
Continuous kVA (at 525 V) [kVA]	69	82	82	103	103	125	125	147	147	183
Continuous kVA (at 575 V) [kVA]	73	86	86	108	108	131	131	154	154	191
Continuous kVA (at 690 V) [kVA]	87	103	103	129	129	157	157	185	185	230
Maximum input current										
Continuous (at 525 V) [A]	74	87	87	109	109	132	132	156	156	193
Continuous (at 575/690 V)	70	83	83	104	104	126	126	149	149	185
Maximum number and size of cables per phase										
- Mains, motor, brake, and load share [mm^2 (AWG)]	2x95 (2x3/0)		2x95 (2x3/0)		2x95 (2x3/0)		2x95 (2x3/0)		2x95 (2x3/0)	
Maximum external mains fuses [A][1)]	160		315		315		315		315	
Estimated power loss at 575 V [W][2), 3)]	1098	1162	1162	1428	1430	1740	1742	2101	2080	2649
Estimated power loss at 690 V [W][2), 3)]	1057	1204	1205	1477	1480	1798	1800	2167	2159	2740
Efficiency[3)]	0.98		0.98		0.98		0.98		0.98	
Output frequency [Hz]	0–590		0–590		0–590		0–590		0–590	
Heat sink overtemperature trip [°C (°F)]	110 (230)		110 (230)		110 (230)		110 (230)		110 (230)	
Control card overtemperature trip [°C (°F)]	75 (167)		75 (167)		75 (167)		75 (167)		75 (167)	

Table 7.5 Electrical Data for Enclosures D1h/D3h/D5h/D6h, Mains Supply 3x525–690 V AC

1) For fuse ratings, see chapter 10.5 Fuses and Circuit Breakers.

2) Typical power loss is at normal conditions and expected to be within ±15% (tolerance relates to variety in voltage and cable conditions). These values are based on a typical motor efficiency (IE/IE3 border line). Lower efficiency motors add to the power loss in the drive. Applies for dimensioning of drive cooling. If the switching frequency is higher than the default setting, the power losses can increase. LCP and typical control card power consumptions are included. For power loss data according to EN 50598-2, refer to drives.danfoss.com/knowledge-center/energy-efficiency-directive/#/. Options and customer load can add up to 30 W to the losses, though usually a fully loaded control card and options for slots A and B each add only 4 W.

3) Measured using 5 m (16.4 ft) shielded motor cables at rated load and rated frequency. Efficiency measured at nominal current. For energy efficiency class, see chapter 10.11 Efficiency. For part load losses, see drives.danfoss.com/knowledge-center/energy-efficiency-directive/#/.

 Danfoss A/S © 01/2018 All rights reserved.

VLT® AutomationDrive FC 302	N160		N200		N250		N315	
High/normal overload (High overload=150% current during 60 s, normal overload=110% current during 60 s)	HO	NO	HO	NO	HO	NO	HO	NO
Typical Shaft output at 525 V [kW]	132	160	160	200	200	250	250	315
Typical Shaft output at 575 V [hp]	200	250	250	300	300	350	350	400
Typical Shaft output at 690 V [kW]	160	200	200	250	250	315	315	400
Enclosure size	**D2h/D4h/D7h/D8h**							
Output current (3-phase)								
Continuous (at 525 V) [A]	201	253	253	303	303	360	360	418
Intermittent (60 s overload) (at 525 V)[A]	301	278	380	333	455	396	540	460
Continuous (at 575/690 V) [A]	192	242	242	290	290	344	344	400
Intermittent (60 s overload) (at 575/690 V) [A]	288	266	363	319	435	378	516	440
Continuous kVA (at 525 V) [kVA]	183	230	230	276	276	327	327	380
Continuous kVA (at 575 V) [kVA]	191	241	241	289	289	343	343	398
Continuous kVA (at 575/690 V) [kVA]	229	289	289	347	347	411	411	478
Maximum input current								
Continuous (at 525 V) [A]	193	244	244	292	292	347	347	403
Continuous (at 575/690 V)	185	233	233	279	279	332	332	385
Maximum number and size of cables per phase								
- Mains, motor, brake, and load share [mm^2 (AWG)]	2x185 (2x350)		2x185 (2x350)		2x185 (2x350)		2x185 (2x350)	
Maximum external mains fuses [A][1)]	550		550		550		550	
Estimated power loss at 575 V [W][2), 3)]	2361	3074	3012	3723	3642	4465	4146	5028
Estimated power loss at 690 V [W][2), 3)]	2446	3175	3123	3851	3771	4614	4258	5155
Efficiency[3)]	0.98		0.98		0.98		0.98	
Output frequency [Hz]	0–590		0–590		0–590		0–590	
Heat sink overtemperature trip [°C (°F)]	110 (230)		110 (230)		110 (230)		110 (230)	
Control card overtemperature trip [°C (°F)]	80 (176)		80 (176)		80 (176)		80 (176)	

Table 7.6 Electrical Data for Enclosures D2h/D4h/D7h/D8h, Mains Supply 3x525–690 V AC

1) For fuse ratings, see chapter 10.5 Fuses and Circuit Breakers.

2) Typical power loss is at normal conditions and expected to be within ±15% (tolerance relates to variety in voltage and cable conditions). These values are based on a typical motor efficiency (IE/IE3 border line). Lower efficiency motors add to the power loss in the drive. Applies for dimensioning of drive cooling. If the switching frequency is higher than the default setting, the power losses can increase. LCP and typical control card power consumptions are included. For power loss data according to EN 50598-2, refer to drives.danfoss.com/knowledge-center/energy-efficiency-directive/#/. Options and customer load can add up to 30 W to the losses, though usually a fully loaded control card and options for slots A and B each add only 4 W.

3) Measured using 5 m (16.4 ft) shielded motor cables at rated load and rated frequency. Efficiency measured at nominal current. For energy efficiency class, see chapter 10.11 Efficiency. For part load losses, see drives.danfoss.com/knowledge-center/energy-efficiency-directive/#/.

 Danfoss A/S © 01/2018 All rights reserved.

VLT® AutomationDrive FC 302	N355		N400		N500	
High/normal overload (High overload=150% current during 60 s, normal overload=110% current during 60 s)	**HO**	**NO**	**HO**	**NO**	**HO**	**NO**
Typical shaft output at 525 V [kW]	315	355	355	400	400	450
Typical shaft output at 575 V [hp]	400	450	400	500	500	600
Typical shaft output at 690 V [kW]	355	450	400	500	500	560
Enclosure size	**E1h/E3h**		**E1h/E3h**		**E1h/E3h**	
Output current (3-phase)						
Continuous (at 525 V) [A]	395	470	429	523	523	596
Intermittent (60 s overload) (at 525 V) [A]	593	517	644	575	785	656
Continuous (at 575/690 V) [A]	380	450	410	500	500	570
Intermittent (60 s overload) (at 575/690 V) [A]	570	495	615	550	750	627
Continuous kVA (at 525 V) [kVA]	376	448	409	498	498	568
Continuous kVA (at 575 V) [kVA]	378	448	408	498	498	568
Continuous kVA (at 690 V) [kVA]	454	538	490	598	598	681
Maximum input current						
Continuous (at 525 V) [A]	381	453	413	504	504	574
Continuous (at 575/690 V) [A]	366	434	395	482	482	549
Maximum number and size of cables per phase (E1h)						
- Mains and motor without brake [mm^2 (AWG)]	5x240 (5x500 mcm)		5x240 (5x500 mcm)		5x240 (5x500 mcm)	
- Mains and motor with brake [mm^2 (AWG)]	4x240 (4x500 mcm)		4x240 (4x500 mcm)		4x240 (4x500 mcm)	
- Brake or regen [mm^2 (AWG)]	2x185 (2x350 mcm)		2x185 (2x350 mcm)		2x185 (2x350 mcm)	
Maximum number and size of cables per phase (E3h)						
- Mains and motor [mm^2 (AWG)]	6x240 (6x500 mcm)		6x240 (6x500 mcm)		6x240 (6x500 mcm)	
- Brake [mm^2 (AWG)]	2x185 (2x350 mcm)		2x185 (2x350 mcm)		2x185 (2x350 mcm)	
- Load share or regen [mm^2 (AWG)]	4x185 (4x350 mcm)		4x185 (4x350 mcm)		4x185 (4x350 mcm)	
Maximum external mains fuses [A][1)]	800		800		800	
Estimated power loss at 600 V [W][2), 3)]	4989	6062	5419	6879	6833	8076
Estimated power loss at 690 V [W][2), 3)]	4920	5939	5332	6715	6678	7852
Efficiency[3)]	0.98		0.98		0.98	
Output frequency [Hz]	0–500		0–500		0–500	
Heat sink overtemperature trip [°C (°F)]	110 (230)		110 (230)		110 (230)	
Control card overtemperature trip [°C (°F)]	80 (176)		80 (176)		80 (176)	
Power card overtemperature trip [°C (°F)]	85 (185)		85 (185)		85 (185)	
Fan power card overtemperature trip [°C (°F)]	85 (185)		85 (185)		85 (185)	
Active in-rush card overtemperature trip [°C (°F)]	85 (185)		85 (185)		85 (185)	

Table 7.7 Electrical Data for Enclosures E1h/E3h, Mains Supply 3x525–690 V AC

1) For fuse ratings, see chapter 10.5 Fuses and Circuit Breakers.

2) Typical power loss is at normal conditions and expected to be within ±15% (tolerance relates to variety in voltage and cable conditions). These values are based on a typical motor efficiency (IE/IE3 border line). Lower efficiency motors add to the power loss in the drive. Applies for dimensioning of drive cooling. If the switching frequency is higher than the default setting, the power losses can increase. LCP and typical control card power consumptions are included. For power loss data according to EN 50598-2, refer to drives.danfoss.com/knowledge-center/energy-efficiency-directive/#/. Options and customer load can add up to 30 W to the losses, though usually a fully loaded control card and options for slots A and B each add only 4 W.

3) Measured using 5 m (16.4 ft) shielded motor cables at rated load and rated frequency. Efficiency measured at nominal current. For energy efficiency class, see chapter 10.11 Efficiency. For part load losses, see drives.danfoss.com/knowledge-center/energy-efficiency-directive/#/.

 Danfoss A/S © 01/2018 All rights reserved.

VLT® AutomationDrive FC 302	N560		N630		N710	
High/normal overload (High overload=150% current during 60 s, normal overload=110% current during 60 s)	**HO**	**NO**	**HO**	**NO**	**HO**	**NO**
Typical shaft output at 525 V [kW]	450	500	500	560	560	670
Typical shaft output at 575 V [hp]	600	650	650	750	750	950
Typical shaft output at 690 V [kW]	560	630	630	710	710	800
Enclosure size	**E2h/E4h**		**E2h/E4h**		**E2h/E4h**	
Output current (3-phase)						
Continuous (at 525 V) [A]	596	630	659	763	763	889
Intermittent (60 s overload) (at 525 V) [A]	894	693	989	839	1145	978
Continuous (at 575/690 V) [A]	570	630	630	730	730	850
Intermittent (60 s overload) (at 575/690 V) [A]	855	693	945	803	1095	935
Continuous kVA (at 525 V) [kVA]	568	600	628	727	727	847
Continuous kVA (at 575 V) [kVA]	568	627	627	727	727	847
Continuous kVA (at 690 V) [kVA]	681	753	753	872	872	1016
Maximum input current						
Continuous (at 525 V) [A]	574	607	635	735	735	857
Continuous (at 575/690 V) [A]	549	607	607	704	704	819
Maximum number and size of cables per phase (E2h)						
- Mains and motor without brake [mm^2 (AWG)]	6x240 (6x500 mcm)		6x240 (6x500 mcm)		6x240 (6x500 mcm)	
- Mains and motor with brake [mm^2 (AWG)]	5x240 (5x500 mcm)		5x240 (5x500 mcm)		5x240 (5x500 mcm)	
- Brake or regen [mm^2 (AWG)]	2x185 (2x350 mcm)		2x185 (2x350 mcm)		2x185 (2x350 mcm)	
Maximum number and size of cables per phase (E4h)						
- Mains and motor [mm^2 (AWG)]	6x240 (6x500 mcm)		6x240 (6x500 mcm)		6x240 (6x500 mcm)	
- Brake [mm^2 (AWG)]	2x185 (2x350 mcm)		2x185 (2x350 mcm)		2x185 (2x350 mcm)	
- Load share or regen [mm^2 (AWG)]	4x185 (4x350 mcm)		4x185 (4x350 mcm)		4x185 (4x350 mcm)	
Maximum external mains fuses [A][1)]	800		1200		1200	
Estimated power loss at 600 V [W][2), 3)]	8069	9208	8543	10346	10319	12723
Estimated power loss at 690 V [W][2), 3)]	7848	8921	8363	10066	10060	12321
Efficiency[3)]	0.98		0.98		0.98	
Output frequency [Hz]	0–500		0–500		0–500	
Heat sink overtemperature trip [°C (°F)]	110 (230)		110 (230)		110 (230)	
Control card overtemperature trip [°C (°F)]	80 (176)		80 (176)		80 (176)	
Power card overtemperature trip [°C (°F)]	85 (185)		85 (185)		85 (185)	
Fan power card overtemperature trip [°C (°F)]	85 (185)		85 (185)		85 (185)	
Active in-rush card overtemperature trip [°C (°F)]	85 (185)		85 (185)		85 (185)	

Table 7.8 Electrical Data for Enclosures E1h–E4h, Mains Supply 3x525–690 V AC

1) For fuse ratings, see chapter 10.5 Fuses and Circuit Breakers.

2) Typical power loss is at normal conditions and expected to be within ±15% (tolerance relates to variety in voltage and cable conditions). These values are based on a typical motor efficiency (IE/IE3 border line). Lower efficiency motors add to the power loss in the drive. Applies for dimensioning of drive cooling. If the switching frequency is higher than the default setting, the power losses can increase. LCP and typical control card power consumptions are included. For power loss data according to EN 50598-2, refer to drives.danfoss.com/knowledge-center/energy-efficiency-directive/#/. Options and customer load can add up to 30 W to the losses, though usually a fully loaded control card and options for slots A and B each add only 4 W.

3) Measured using 5 m (16.4 ft) shielded motor cables at rated load and rated frequency. Efficiency measured at nominal current. For energy efficiency class, see chapter 10.11 Efficiency. For part load losses, see drives.danfoss.com/knowledge-center/energy-efficiency-directive/#/.

 Danfoss A/S © 01/2018 All rights reserved.

7.3 Mains Supply

Mains supply (L1, L2, L3)	
Supply voltage	380–500 V ±10%, 525–690 V ±10%

Mains voltage low/mains voltage drop-out:
During low mains voltage or a mains drop-out, the drive continues until the DC-link voltage drops below the minimum stop level, which corresponds typically to 15% below the lowest rated supply voltage of the drive. Power-up and full torque cannot be expected at mains voltage lower than 10% below the lowest rated supply voltage of the drive.

Supply frequency	50/60 Hz ±5%
Maximum imbalance temporary between mains phases	3.0% of rated supply voltage[1)]
True power factor (λ)	≥0.9 nominal at rated load
Displacement power factor (cos Φ) near unity	(>0.98)
Switching on input supply L1, L2, L3 (power ups)	Maximum 1 time/2 minute
Environment according to EN60664-1	Overvoltage category III/pollution degree 2

The drive is suitable for use on a circuit capable of delivering up to 100 kA short circuit current rating (SCCR) at 480/600 V.
1) Calculations based on UL/IEC61800-3.

7

7.4 Motor Output and Motor Data

Motor output (U, V, W)	
Output voltage	0–100% of supply voltage
Output frequency	0–590 Hz[1)]
Output frequency in flux mode	0–300 Hz
Switching on output	Unlimited
Ramp times	0.01–3600 s

1) Dependent on voltage and power.

Torque characteristics	
Starting torque (constant torque)	Maximum 150% for 60 s[1), 2)]
Overload torque (constant torque)	Maximum 150% for 60 s[1), 2)]

1) Percentage relates to the nominal current of the drive.
2) Once every 10 minutes.

7.5 Ambient Conditions

Environment	
D1h/D2h/D5h/D6h/D7h/D8h/E1h/E2h enclosure	IP21/Type 1, IP54/Type 12
D3h/D4h/E3h/E4h enclosure	IP20/Chassis
Vibration test (standard/ruggedized)	0.7 g/1.0 g
Relative humidity	5%–95% (IEC 721-3-3; Class 3K3 (non-condensing) during operation)
Aggressive environment (IEC 60068-2-43) H_2S test	Class Kd
Aggressive gases (IEC 60721-3-3)	Class 3C3
Test method according to IEC 60068-2-43	H2S (10 days)
Ambient temperature (at SFAVM switching mode)	
- with derating	Maximum 55 °C (131 °F)[1)]
- with full output power of typical EFF2 motors (up to 90% output current)	Maximum 50 °C (122 °F)[1)]
- at full continuous FC output current	Maximum 45 °C (113 °F)[1)]
Minimum ambient temperature during full-scale operation	0 °C (32 °F)
Minimum ambient temperature at reduced performance	-10 °C (14 °F)
Temperature during storage/transport	-25 to +65/70 °C (13 to 149/158 °F)
Maximum altitude above sea level without derating	1000 m (3281 ft)
Maximum altitude above sea level with derating	3000 m (9842 ft)

1) For more information on derating, see chapter 9.6 Derating.

 Danfoss A/S © 01/2018 All rights reserved.

EMC standards, Emission	EN 61800-3
EMC standards, Immunity	EN 61800-3
Energy efficiency class[1)]	IE2

1) Determined according to EN 50598-2 at:

- *Rated load.*
- *90% rated frequency.*
- *Switching frequency factory setting.*
- *Switching pattern factory setting.*

7.6 Cable Specifications

Cable lengths and cross-sections for control cables	
Maximum motor cable length, shielded	150 m (492 ft)
Maximum motor cable length, unshielded	300 m (984 ft)
Maximum cross-section to motor, mains, load sharing, and brake	See *chapter 7 Specifications*[1)]
Maximum cross-section to control terminals, rigid wire	1.5 mm^2/16 AWG (2x0.75 mm^2)
Maximum cross-section to control terminals, flexible cable	1 mm^2/18 AWG
Maximum cross-section to control terminals, cable with enclosed core	0.5 mm^2/20 AWG
Minimum cross-section to control terminals	0.25 mm^2/23 AWG

1) For power cables, see electrical data in chapter 7.1 Electrical Data, 380–500 V and chapter 7.2 Electrical Data, 525–690 V.

7.7 Control Input/Output and Control Data

Digital inputs	
Programmable digital inputs	4 (6)
Terminal number	18, 19, 27[1)], 29[1)], 32, 33
Logic	PNP or NPN
Voltage level	0–24 V DC
Voltage level, logic 0 PNP	<5 V DC
Voltage level, logic 1 PNP	>10 V DC
Voltage level, logic 0 NPN	>19 V DC
Voltage level, logic 1 NPN	<14 V DC
Maximum voltage on input	28 V DC
Input resistance, R_i	Approximately 4 kΩ

All digital inputs are galvanically isolated from the supply voltage (PELV) and other high-voltage terminals.
1) Terminals 27 and 29 can also be programmed as outputs.

Analog inputs	
Number of analog inputs	2
Terminal number	53, 54
Modes	Voltage or current
Mode select	Switches A53 and A54
Voltage mode	Switch A53/A54=(U)
Voltage level	-10 V to +10 V (scaleable)
Input resistance, R_i	Approximately 10 kΩ
Maximum voltage	±20 V
Current mode	Switch A53/A54=(I)
Current level	0/4 to 20 mA (scaleable)
Input resistance, R_i	Approximately 200 Ω
Maximum current	30 mA
Resolution for analog inputs	10 bit (+ sign)
Accuracy of analog inputs	Maximum error 0.5% of full scale
Bandwidth	100 Hz

The analog inputs are galvanically isolated from the supply voltage (PELV) and other high-voltage terminals.

 Danfoss A/S © 01/2018 All rights reserved.

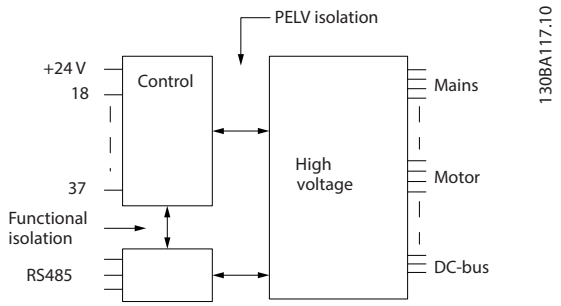

Illustration 7.1 PELV Isolation

Pulse inputs	
Programmable pulse inputs	2
Terminal number pulse	29, 33
Maximum frequency at terminal 29, 33 (push-pull driven)	110 kHz
Maximum frequency at terminal 29, 33 (open collector)	5 kHz
Minimum frequency at terminal 29, 33	4 Hz
Voltage level	See *Digital Inputs* in *chapter 7.7 Control Input/Output and Control Data*
Maximum voltage on input	28 V DC
Input resistance, R_i	Approximately 4 kΩ
Pulse input accuracy (0.1–1 kHz)	Maximum error: 0.1% of full scale

Analog output	
Number of programmable analog outputs	1
Terminal number	42
Current range at analog output	0/4–20 mA
Maximum resistor load to common at analog output	500 Ω
Accuracy on analog output	Maximum error: 0.8% of full scale
Resolution on analog output	8 bit

The analog output is galvanically isolated from the supply voltage (PELV) and other high-voltage terminals.

Control card, RS485 serial communication	
Terminal number	68 (P, TX+, RX+), 69 (N, TX-, RX-)
Terminal number 61	Common for terminals 68 and 69

The RS485 serial communication circuit is functionally separated from other central circuits and galvanically isolated from the supply voltage (PELV).

Digital output	
Programmable digital/pulse outputs	2
Terminal number	27, 29[1)]
Voltage level at digital/frequency output	0–24 V
Maximum output current (sink or source)	40 mA
Maximum load at frequency output	1 kΩ
Maximum capacitive load at frequency output	10 nF
Minimum output frequency at frequency output	0 Hz
Maximum output frequency at frequency output	32 kHz
Accuracy of frequency output	Maximum error: 0.1% of full scale
Resolution of frequency outputs	12 bit

1) Terminals 27 and 29 can also be programmed as inputs.

The digital output is galvanically isolated from the supply voltage (PELV) and other high-voltage terminals.

 Danfoss A/S © 01/2018 All rights reserved.

Control card, 24 V DC output	
Terminal number	12, 13
Maximum load	200 mA

The 24 V DC supply is galvanically isolated from the supply voltage (PELV), but has the same potential as the analog and digital inputs and outputs.

Relay outputs	
Programmable relay outputs	2
Maximum cross-section to relay terminals	2.5 mm^2 (12 AWG)
Minimum cross-section to relay terminals	0.2 mm^2 (30 AWG)
Length of stripped wire	8 mm (0.3 in)
Relay 01 terminal number	1–3 (break), 1–2 (make)
Maximum terminal load (AC-1)[1] on 1–2 (NO) (Resistive load)[2, 3]	400 V AC, 2 A
Maximum terminal load (AC-15)[1] on 1–2 (NO) (Inductive load @ cosφ 0.4)	240 V AC, 0.2 A
Maximum terminal load (DC-1)[1] on 1–2 (NO) (Resistive load)	80 V DC, 2 A
Maximum terminal load (DC-13)[1] on 1–2 (NO) (Inductive load)	24 V DC, 0.1 A
Maximum terminal load (AC-1)[1] on 1–3 (NC) (Resistive load)	240 V AC, 2 A
Maximum terminal load (AC-15)[1] on 1–3 (NC) (Inductive load @ cosφ 0.4)	240 V AC, 0.2 A
Maximum terminal load (DC-1)[1] on 1–3 (NC) (Resistive load)	50 V DC, 2 A
Maximum terminal load (DC-13)[1] on 1–3 (NC) (Inductive load)	24 V DC, 0.1 A
Minimum terminal load on 1–3 (NC), 1–2 (NO)	24 V DC 10 mA, 24 V AC 2 mA
Environment according to EN 60664-1	Overvoltage category III/pollution degree 2
Relay 02 terminal number	4–6 (break), 4–5 (make)
Maximum terminal load (AC-1)[1] on 4–5 (NO) (Resistive load)[2, 3]	400 V AC, 2 A
Maximum terminal load (AC-15)[1] on 4–5 (NO) (Inductive load @ cosφ 0.4)	240 V AC, 0.2 A
Maximum terminal load (DC-1)[1] on 4–5 (NO) (Resistive load)	80 V DC, 2 A
Maximum terminal load (DC-13)[1] on 4–5 (NO) (Inductive load)	24 V DC, 0.1 A
Maximum terminal load (AC-1)[1] on 4–6 (NC) (Resistive load)	240 V AC, 2 A
Maximum terminal load (AC-15)[1] on 4–6 (NC) (Inductive load @ cosφ 0.4)	240 V AC, 0.2 A
Maximum terminal load (DC-1)[1] on 4–6 (NC) (Resistive load)	50 V DC, 2 A
Maximum terminal load (DC-13)[1] on 4–6 (NC) (Inductive load)	24 V DC, 0.1 A
Minimum terminal load on 4–6 (NC), 4–5 (NO)	24 V DC 10 mA, 24 V AC 2 mA
Environment according to EN 60664-1	Overvoltage category III/pollution degree 2

The relay contacts are galvanically isolated from the rest of the circuit by reinforced isolation (PELV).
1) IEC 60947 part 4 and 5.
2) Overvoltage Category II.
3) UL applications 300 V AC 2 A.

Control card, +10 V DC output	
Terminal number	50
Output voltage	10.5 V ±0.5 V
Maximum load	25 mA

The 10 V DC supply is galvanically isolated from the supply voltage (PELV) and other high-voltage terminals.

Control characteristics	
Resolution of output frequency at 0–1000 Hz	±0.003 Hz
System response time (terminals 18, 19, 27, 29, 32, 33)	≤2 m/s
Speed control range (open loop)	1:100 of synchronous speed
Speed accuracy (open loop)	30–4000 RPM: Maximum error of ±8 RPM

All control characteristics are based on a 4-pole asynchronous motor.

 Danfoss A/S © 01/2018 All rights reserved.

Control card performance	
Scan interval	5 M/S

Control card, USB serial communication	
USB standard	1.1 (full speed)
USB plug	USB type B device plug

NOTICE

Connection to PC is carried out via a standard host/device USB cable.
The USB connection is galvanically isolated from the supply voltage (PELV) and other high-voltage terminals.
The USB connection is not galvanically isolated from ground. Use only isolated laptop/PC as connection to the USB connector on the drive or an isolated USB cable/converter.

7.8 Enclosure Weights

Enclosure	380–480/500 V	525–690 V
D1h	62 (137)	62 (137)
D2h	125 (276)	125 (276)
D3h	62 (137) 108 (238)[1)]	62 (137) 108 (238)[1)]
D4h	125 (276) 179 (395)[1)]	125 (276) 179 (395)[1)]
D5h	99 (218)	99 (218)
D6h	128 (282)	128 (282)
D7h	185 (408)	185 (408)
D8h	232 (512)	232 (512)

Table 7.9 Enclosure D1h–D8h Weights, kg (lb)

1) With optional load share and regen terminals.

Enclosure	380–480/500 V	525–690 V
E1h	295 (650)	295 (650)
E2h	318 (700)	318 (700)
E3h	272 (600)	272 (600)
E4h	295 (650)	295 (650)

Table 7.10 Enclosure E1h–E4h Weights, kg (lb)

 Danfoss A/S © 01/2018 All rights reserved.

8 Exterior and Terminal Dimensions

8.1 D1h Exterior and Terminal Dimensions

8.1.1 D1h Exterior Dimensions

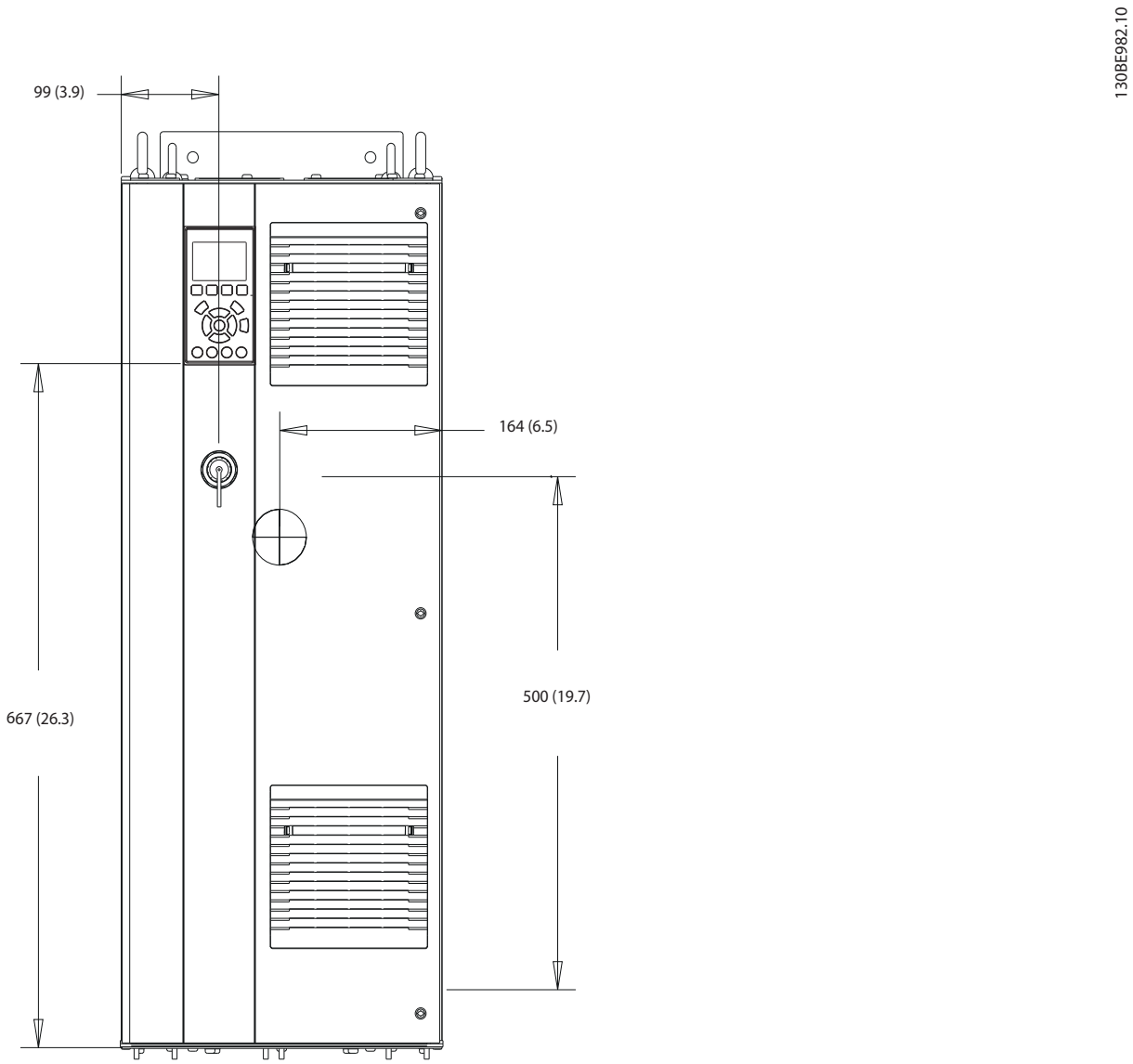

Illustration 8.1 Front View of D1h

 Danfoss A/S © 01/2018 All rights reserved.

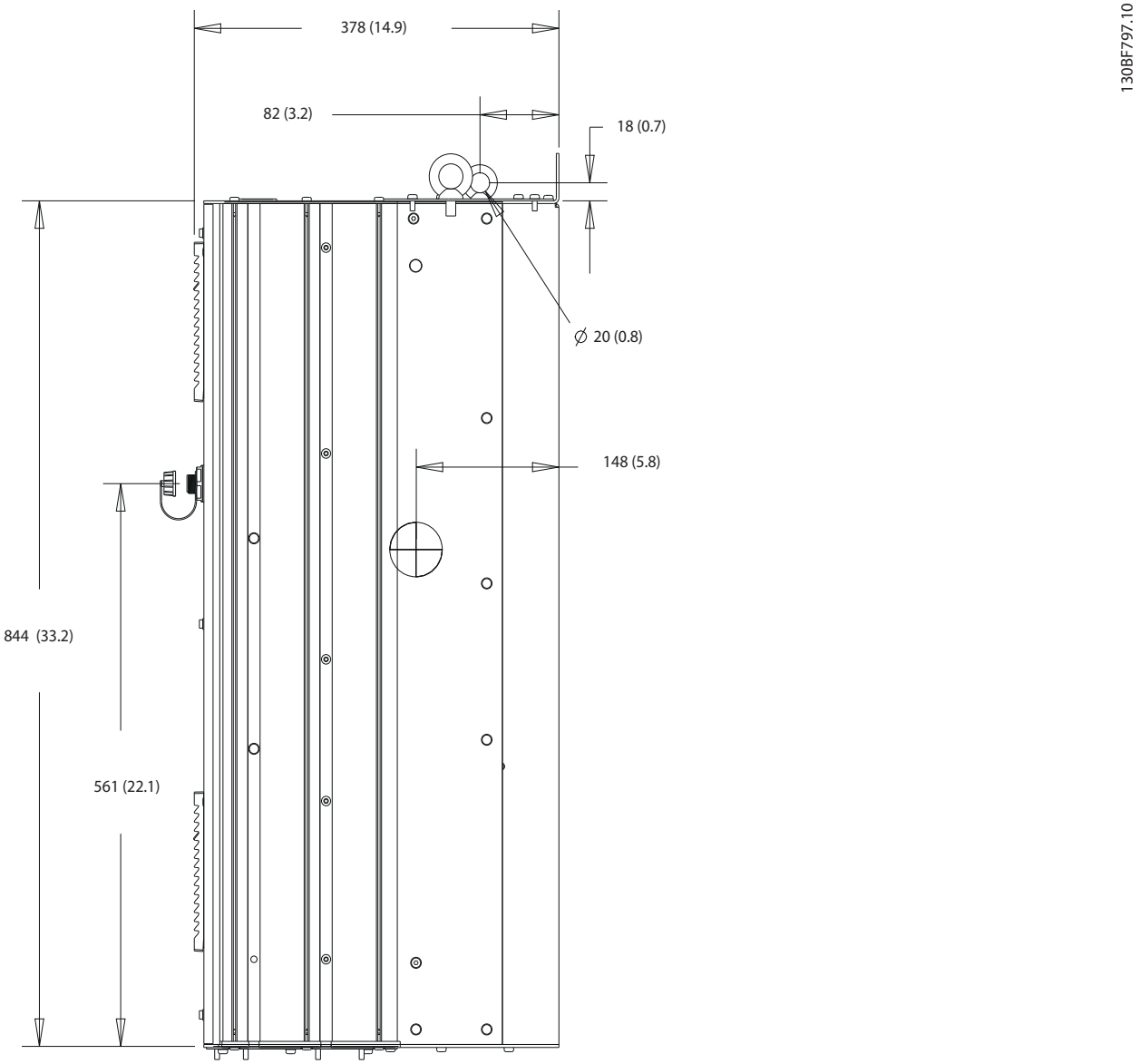

Illustration 8.2 Side View of D1h

 Danfoss A/S © 01/2018 All rights reserved.

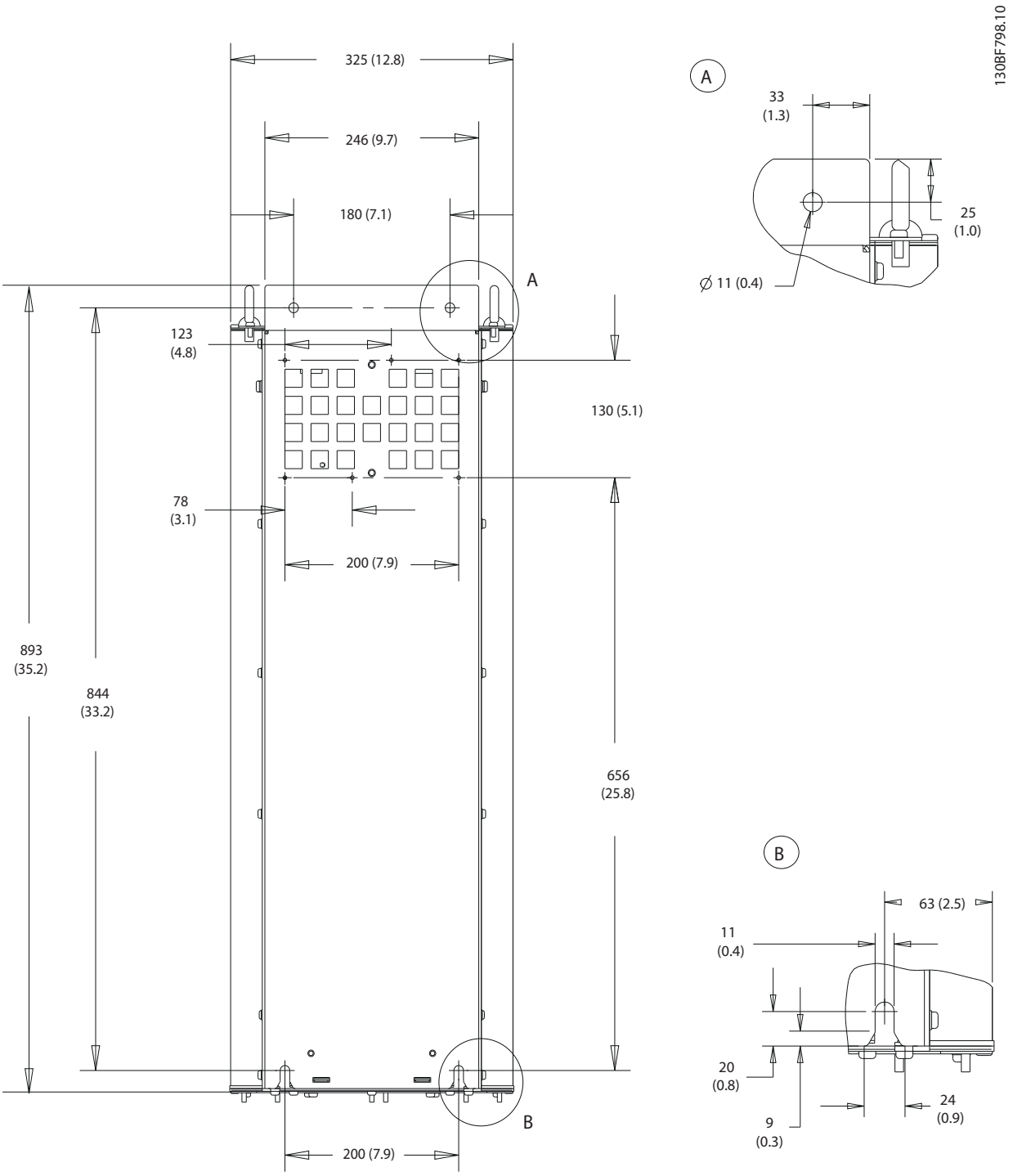

Illustration 8.3 Back View of D1h

Danfoss A/S © 01/2018 All rights reserved.

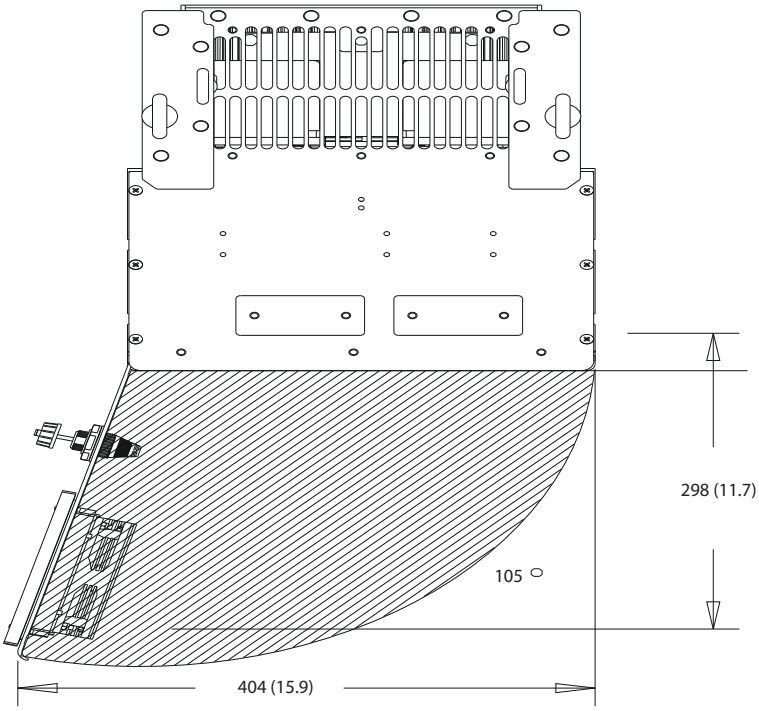

Illustration 8.4 Door Clearance for D1h

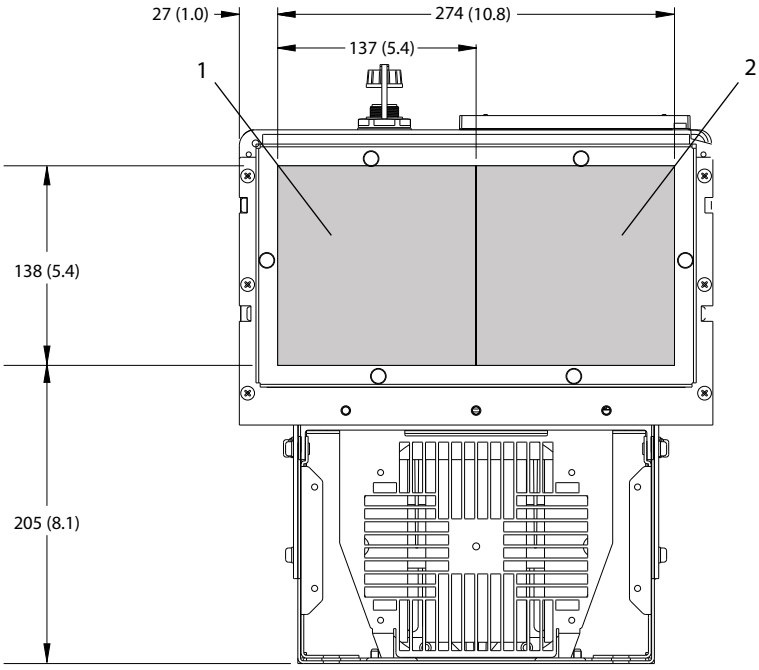

1	Mains side	2	Motor side

Illustration 8.5 Gland Plate Dimensions for D1h

 Danfoss A/S © 01/2018 All rights reserved.

8.1.2 D1h Terminal Dimensions

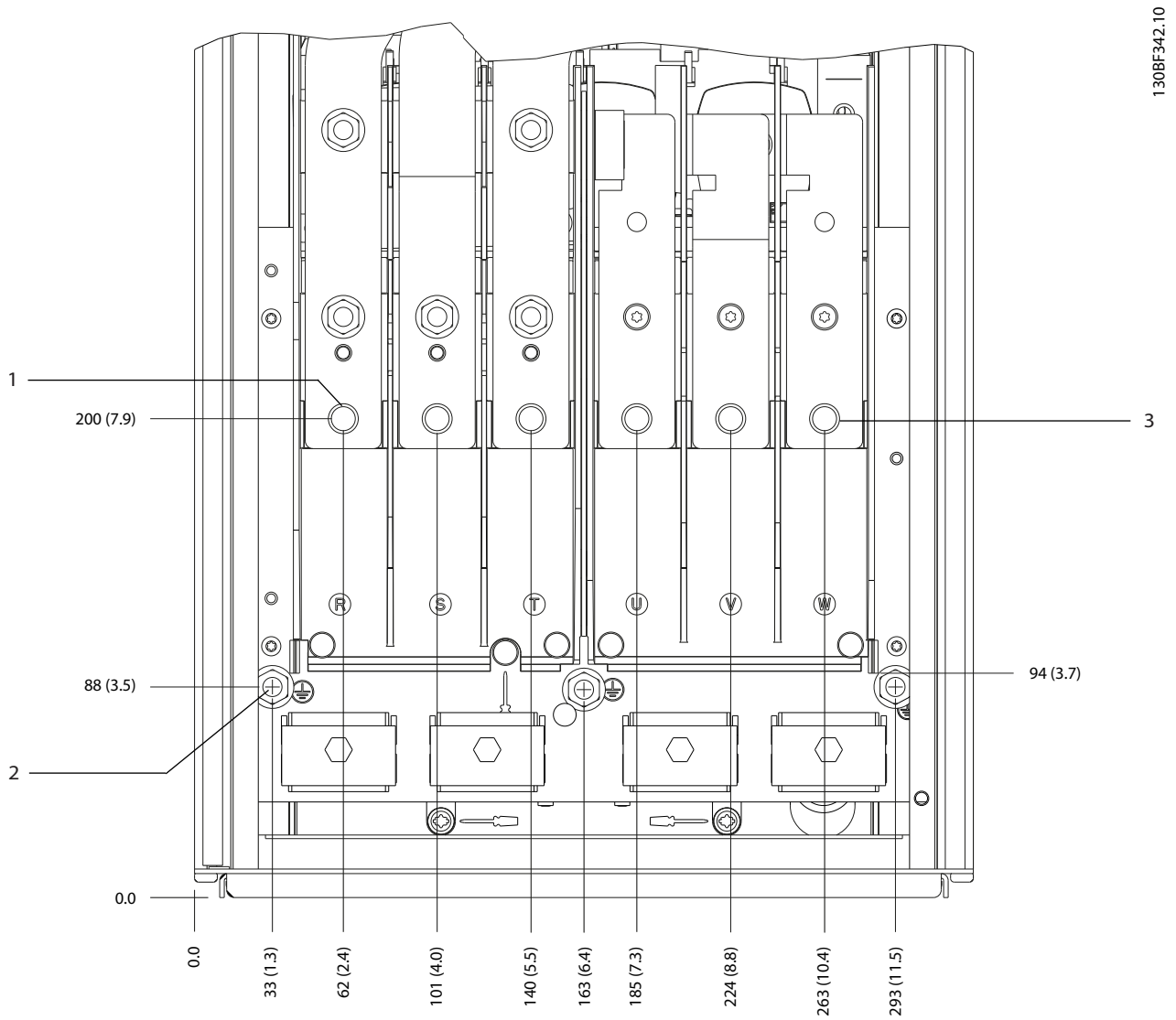

1	Mains terminals	3	Motor terminals
2	Ground terminals	–	–

Illustration 8.6 D1h Terminal Dimensions (Front View)

 Danfoss A/S © 01/2018 All rights reserved.

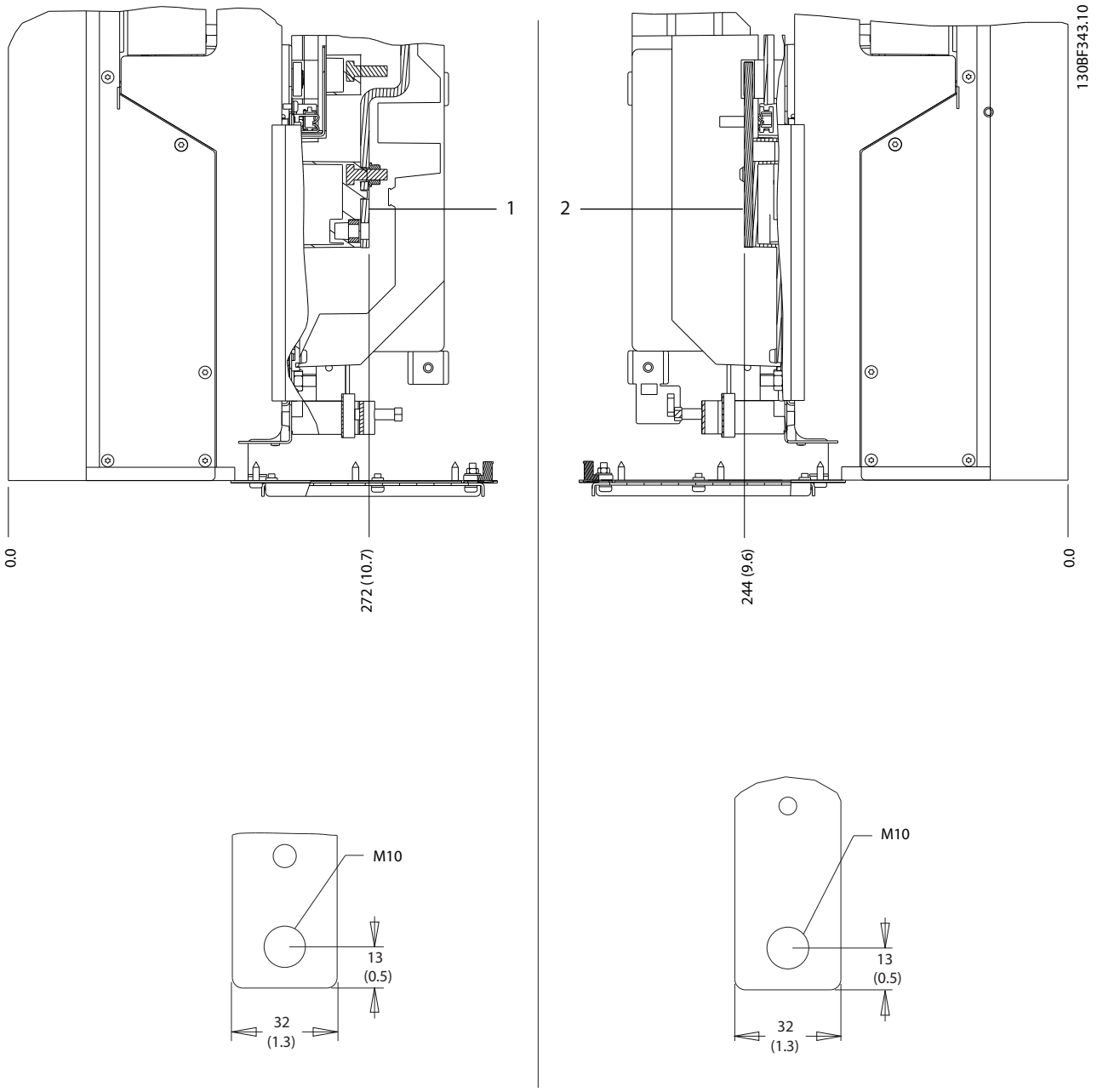

1	Mains terminals	2	Motor terminals

Illustration 8.7 D1h Terminal Dimensions(Side Views)

 Danfoss A/S © 01/2018 All rights reserved.

8.2 D2h Exterior and Terminal Dimensions

8.2.1 D2h Exterior Dimensions

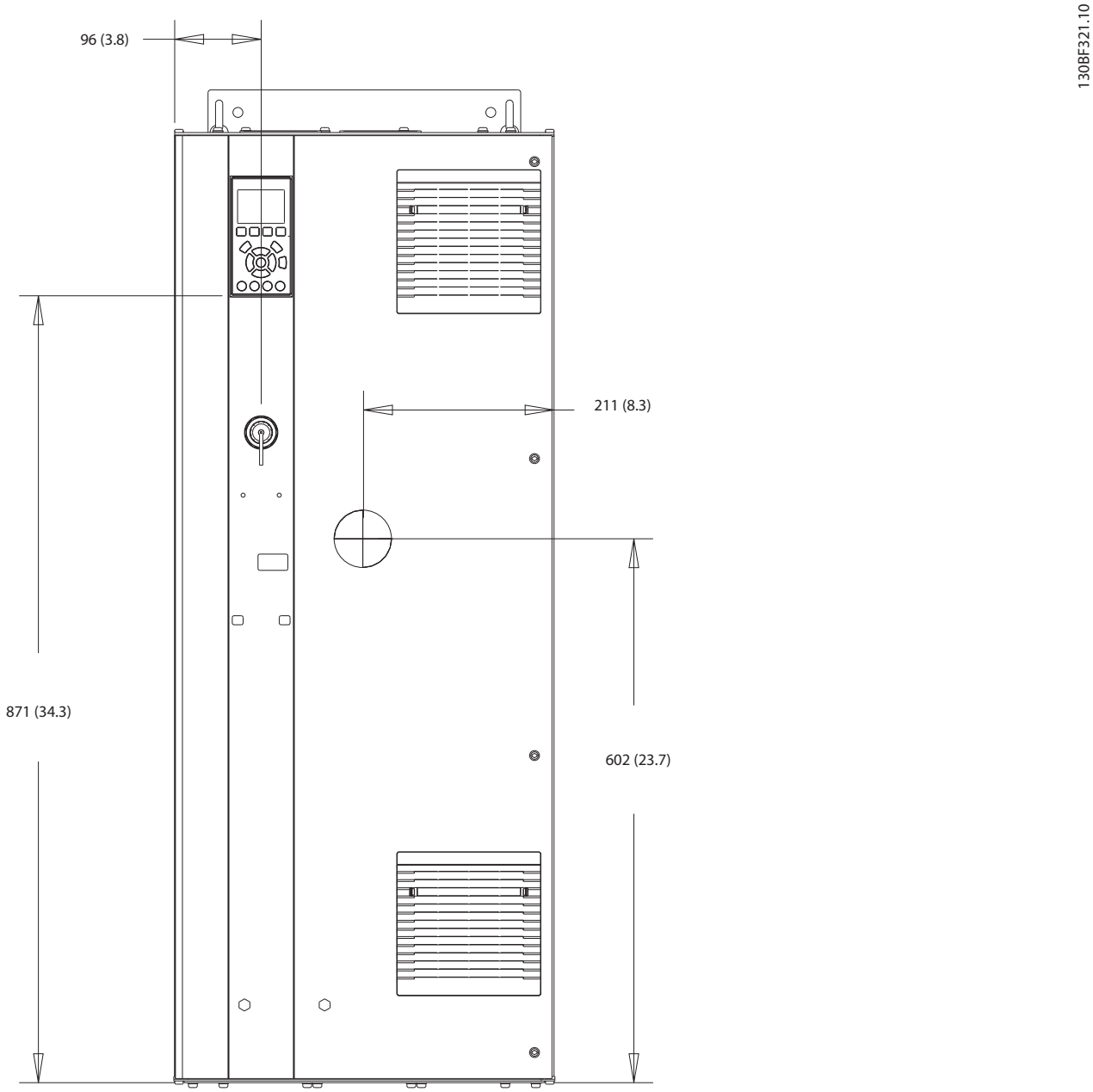

Illustration 8.8 Front View of D2h

 Danfoss A/S © 01/2018 All rights reserved.

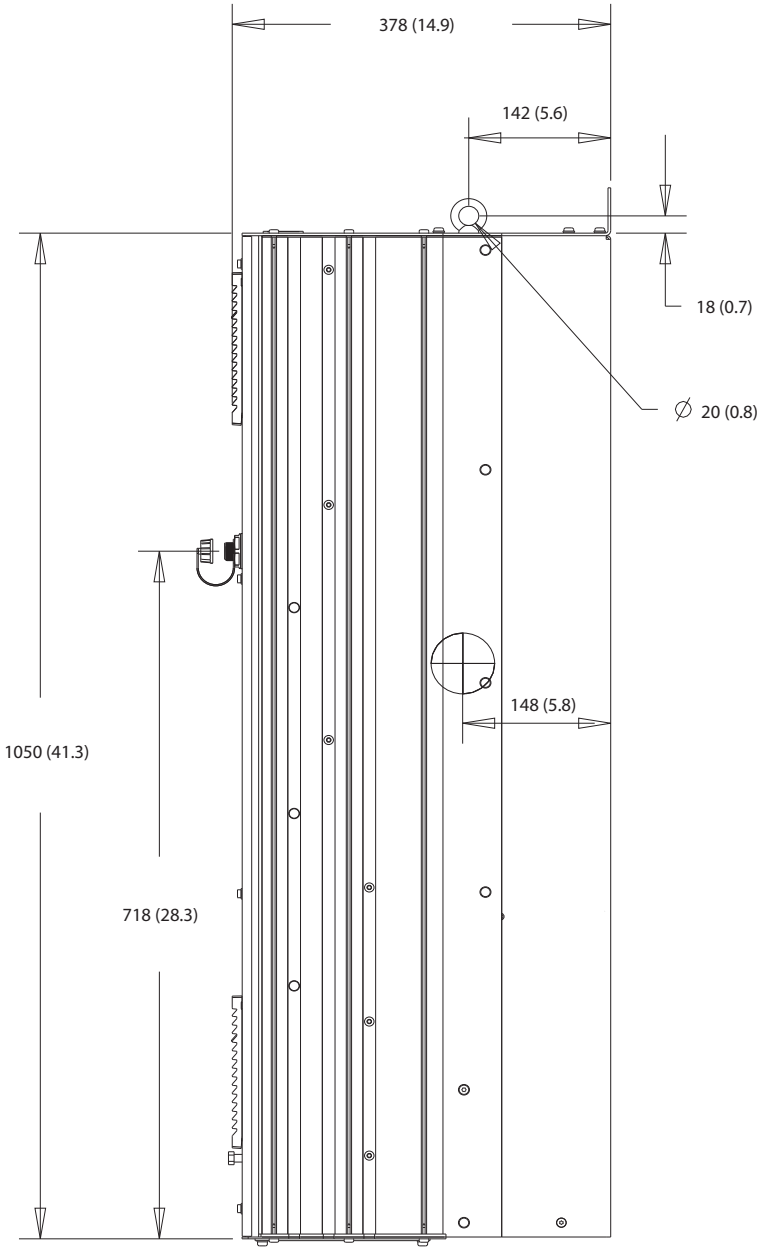

Illustration 8.9 Side View of D2h

 Danfoss A/S © 01/2018 All rights reserved.

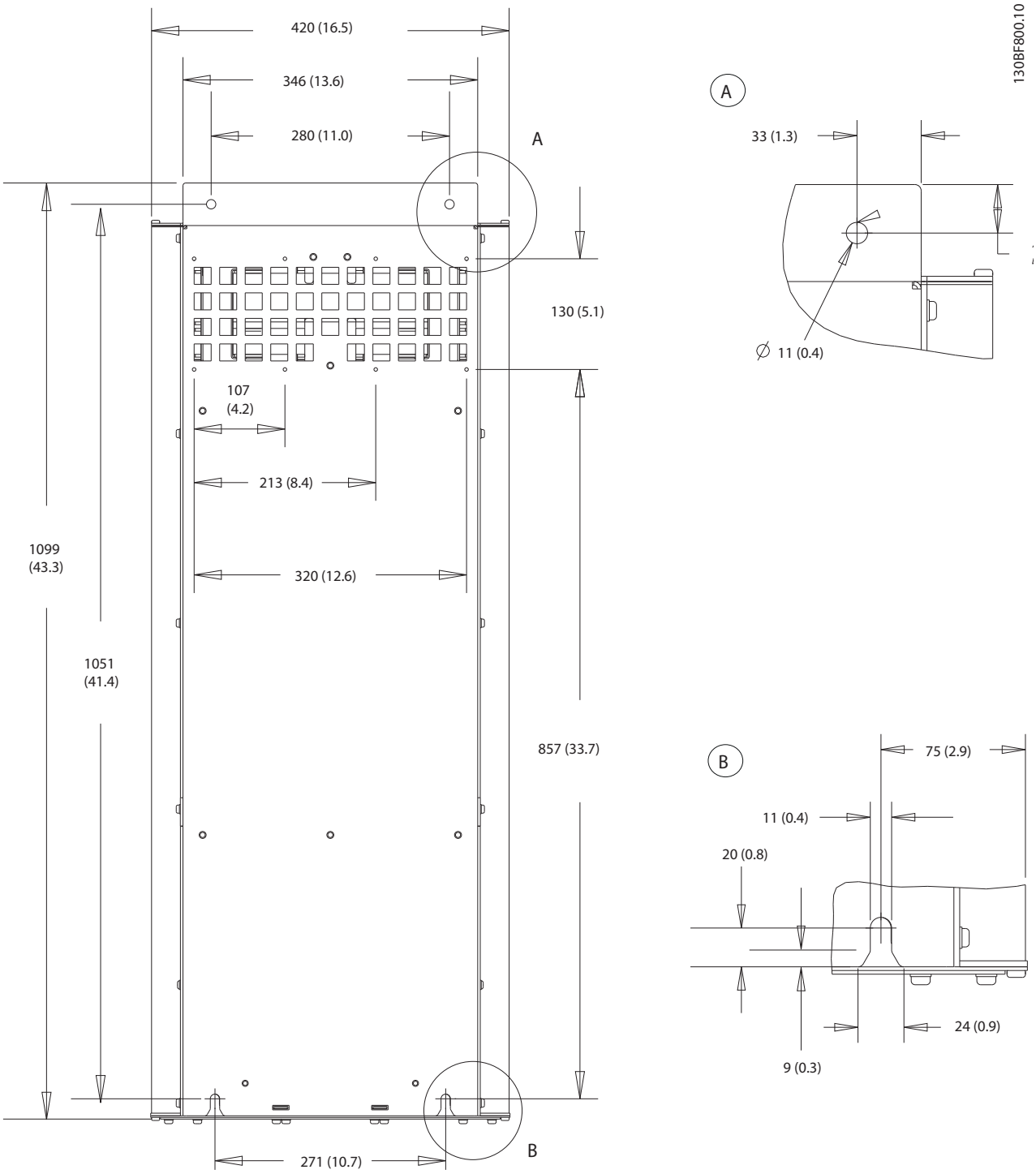

Illustration 8.10 Back View of D2h

 Danfoss A/S © 01/2018 All rights reserved.

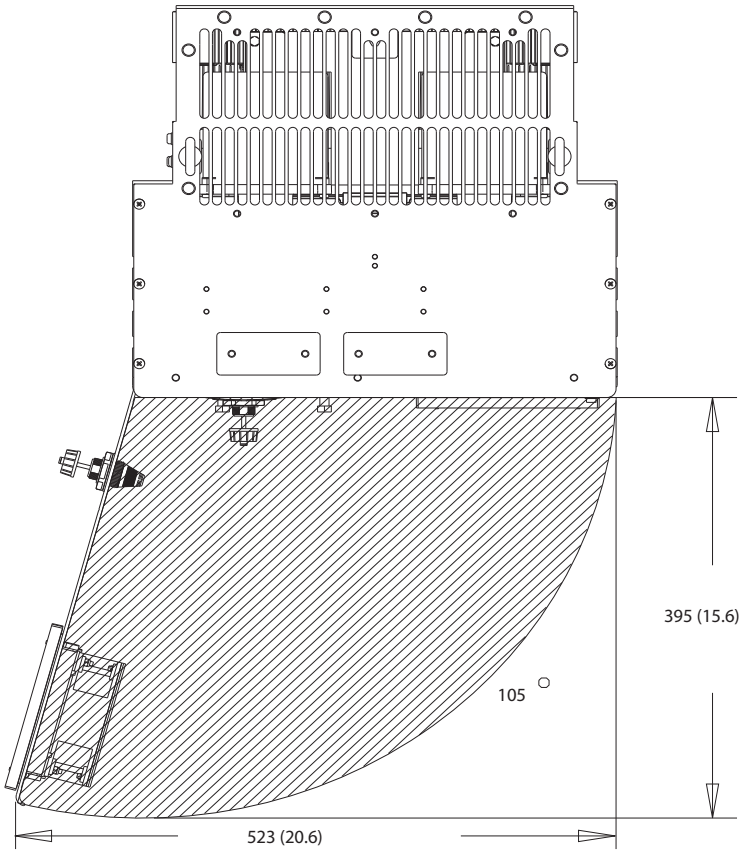

Illustration 8.11 Door Clearance for D2h

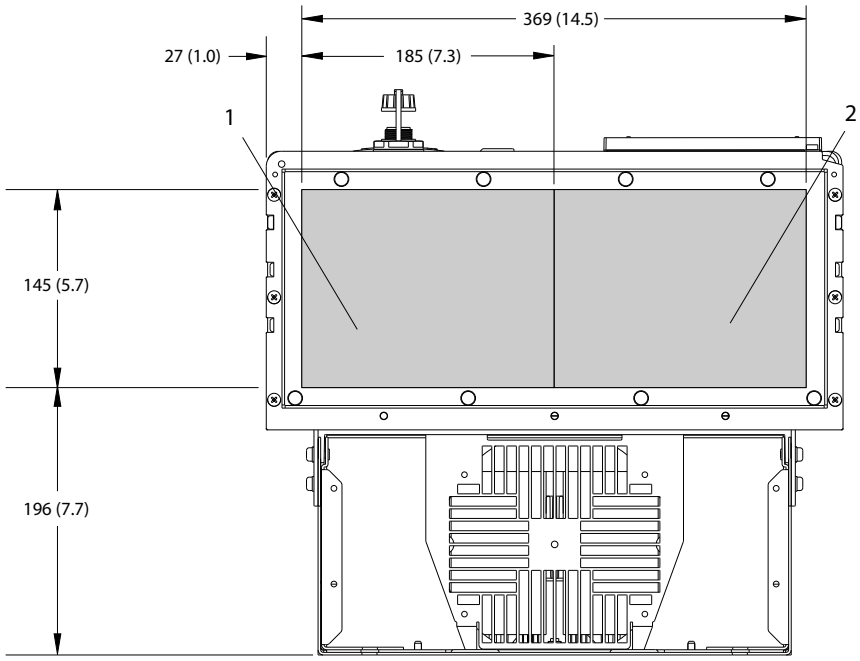

1	Mains side	2	Motor side

Illustration 8.12 Gland Plate Dimensions for D2h

 Danfoss A/S © 01/2018 All rights reserved.

8.2.2 D2h Terminal Dimensions

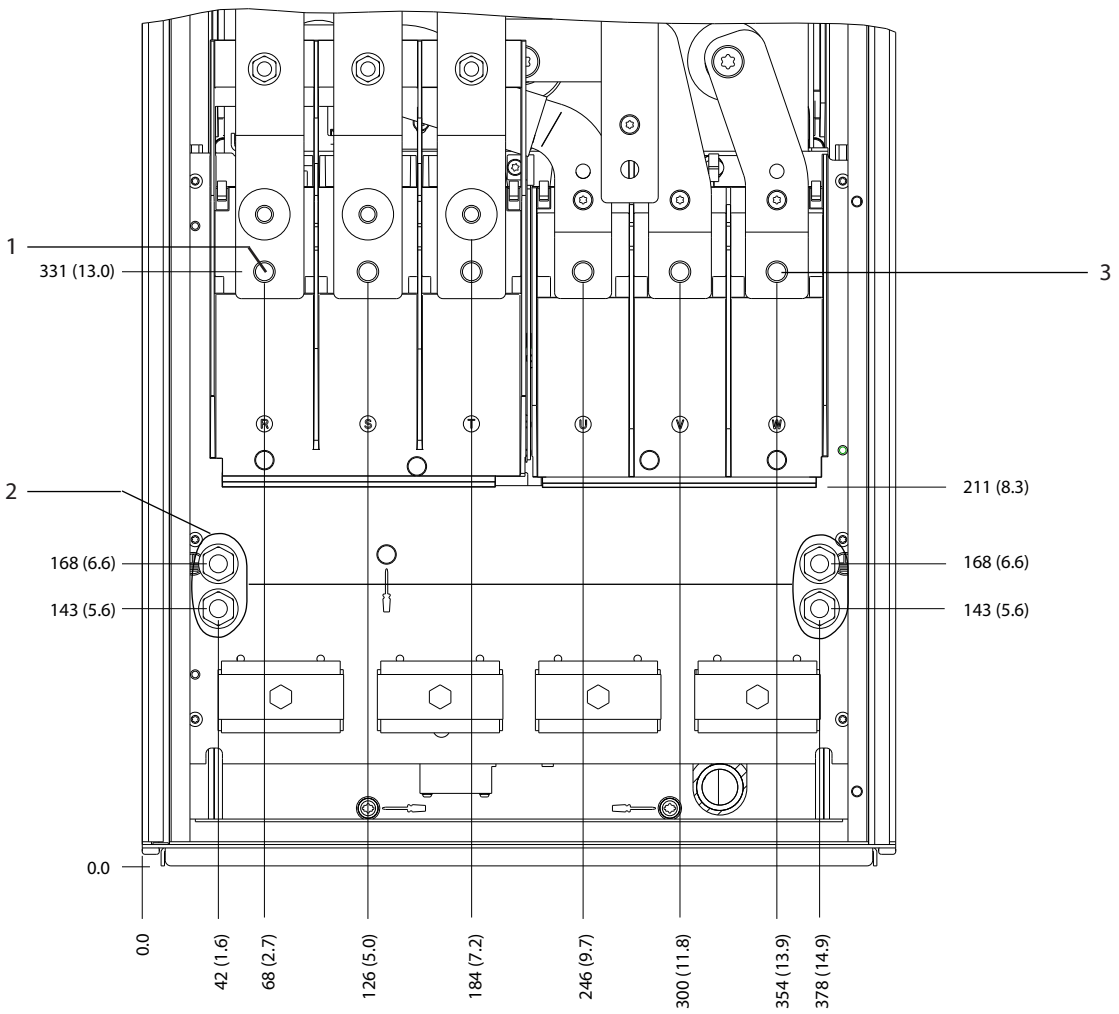

1	Mains terminals	3	Motor terminals
2	Ground terminals	–	–

Illustration 8.13 D2h Terminal Dimensions (Front View)

 Danfoss A/S © 01/2018 All rights reserved.

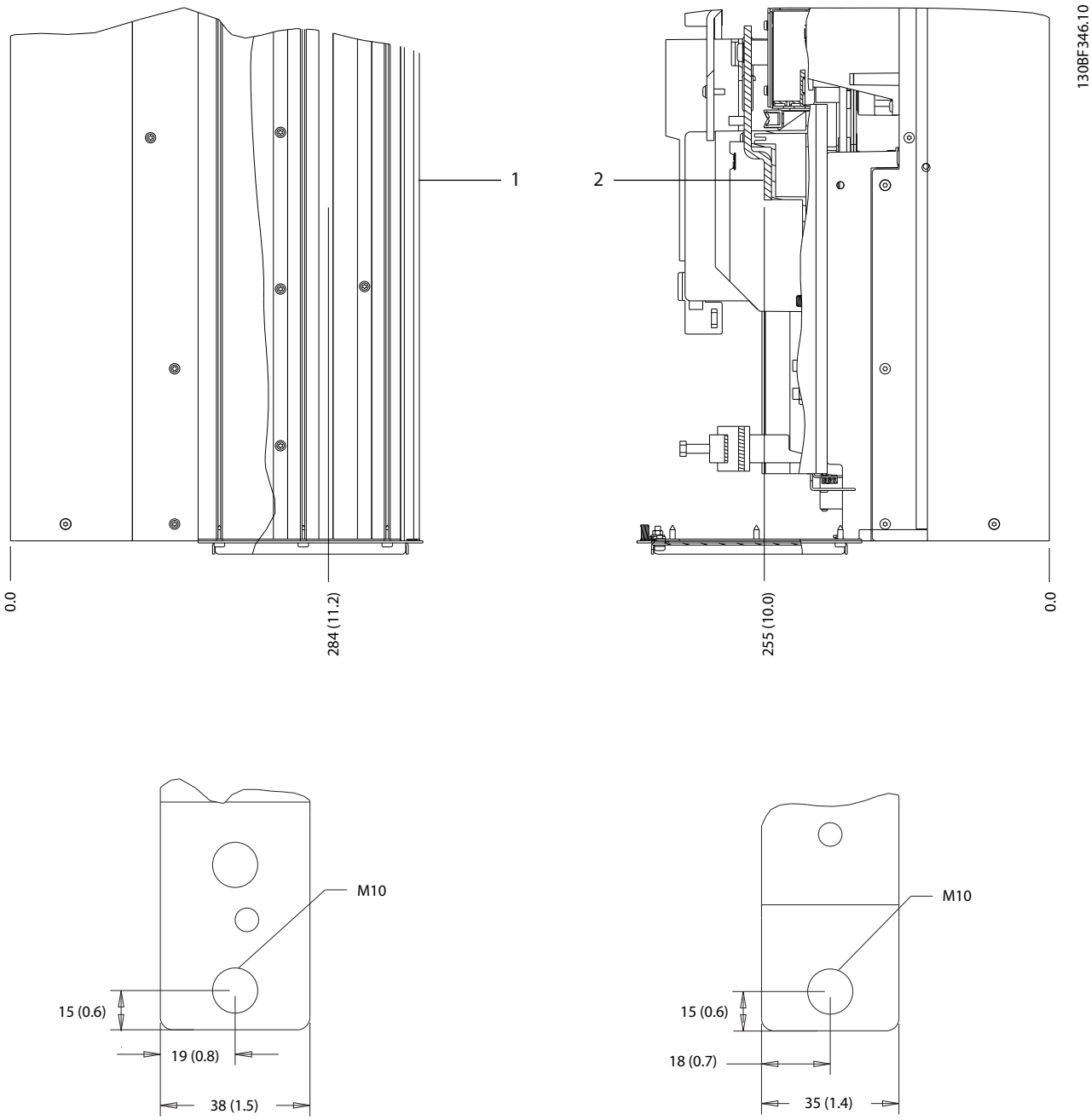

1	Mains terminals	2	Motor terminals

Illustration 8.14 D2h Terminal Dimensions (Side Views)

Danfoss A/S © 01/2018 All rights reserved.

8.3 D3h Exterior and Terminal Dimensions

8.3.1 D3h Exterior Dimensions

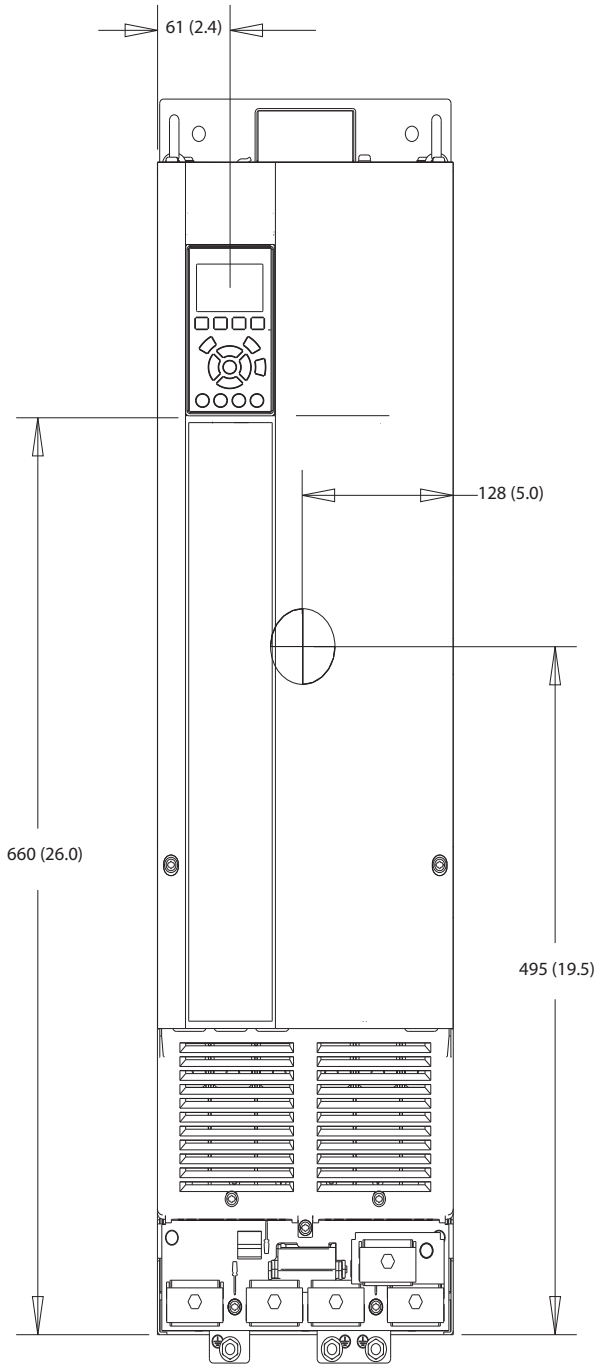

Illustration 8.15 Front View of D3h

 Danfoss A/S © 01/2018 All rights reserved.

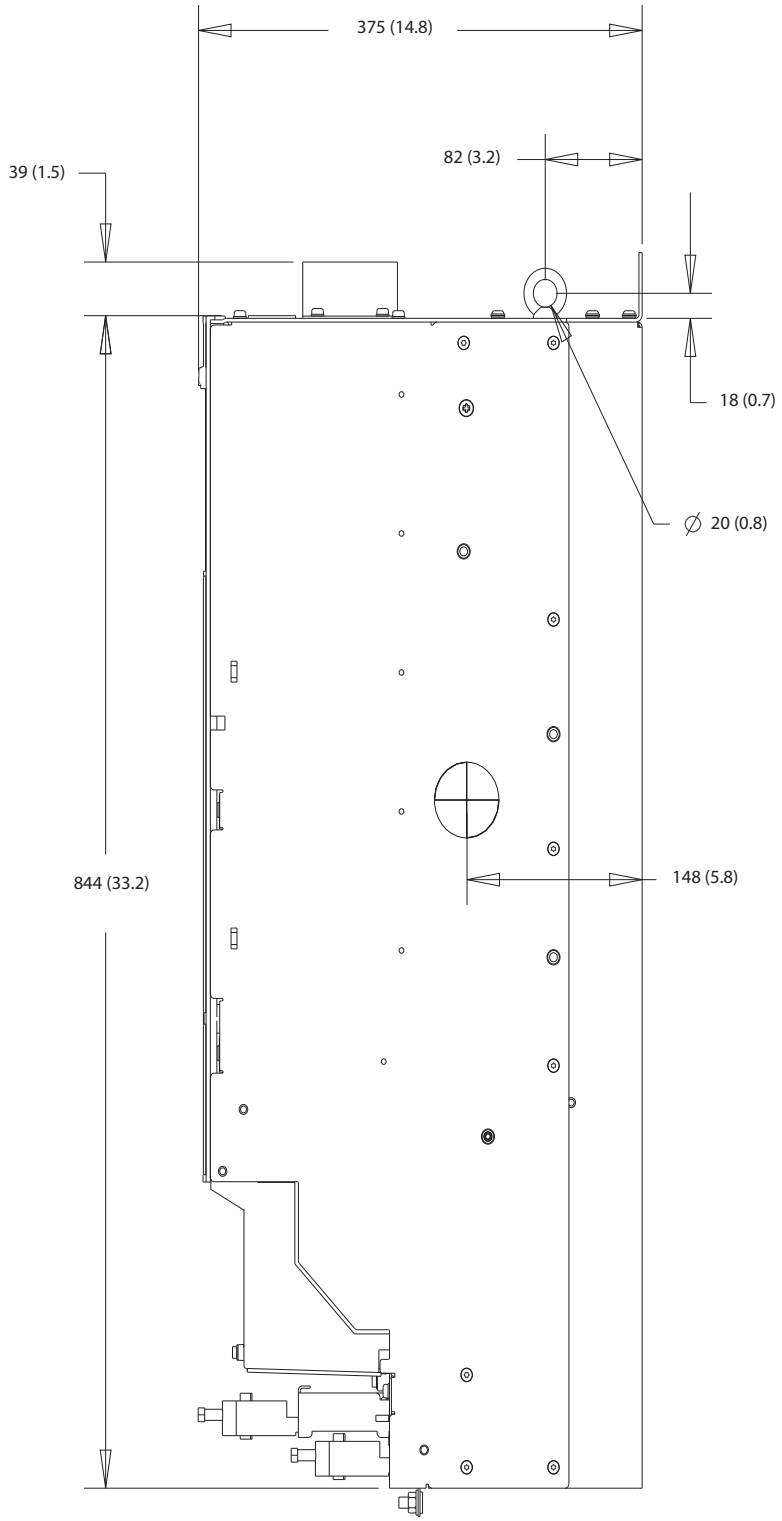

Illustration 8.16 Side View of D3h

 Danfoss A/S © 01/2018 All rights reserved.

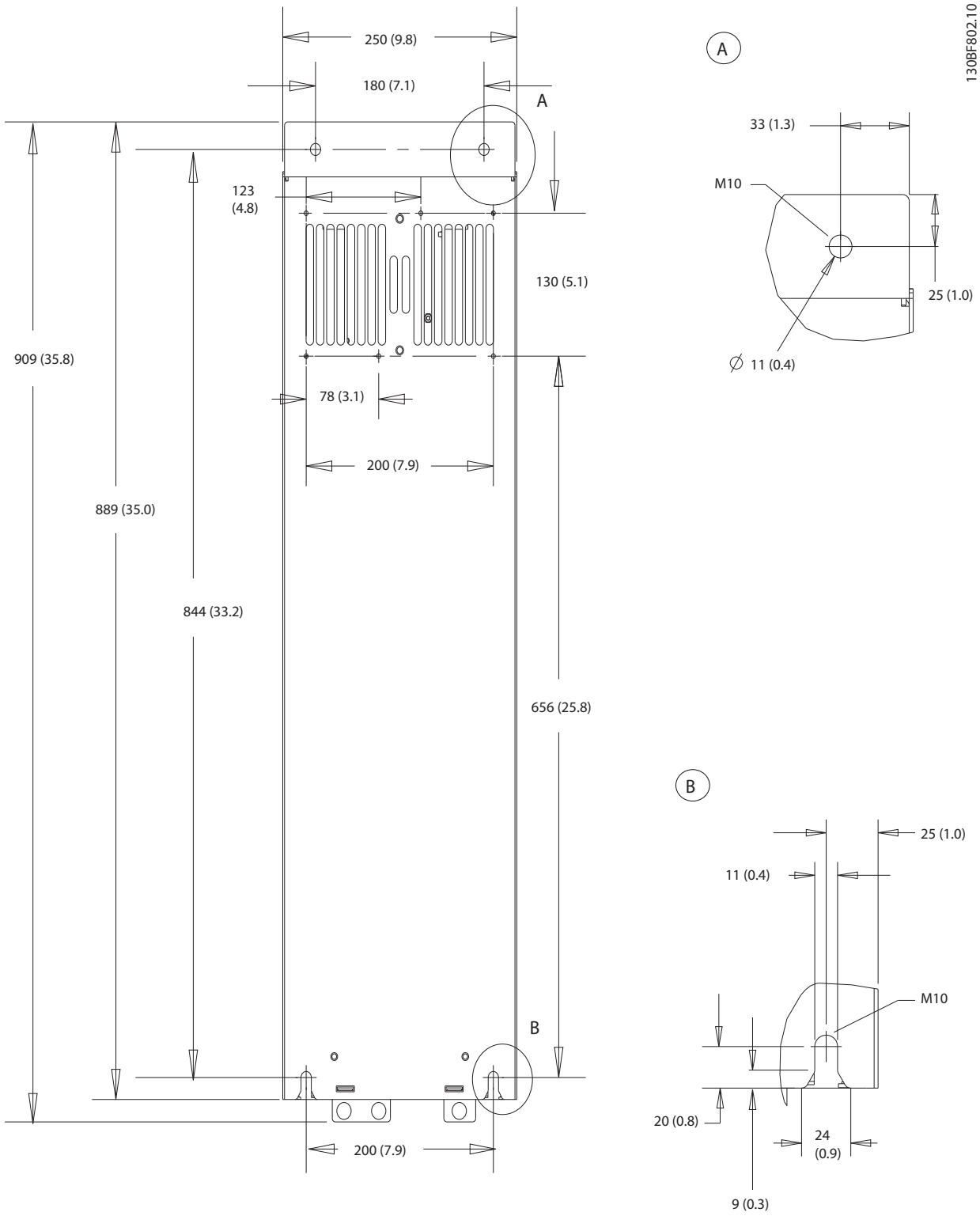

Illustration 8.17 Back View of D3h

Danfoss A/S © 01/2018 All rights reserved.

8.3.2 D3h Terminal Dimensions

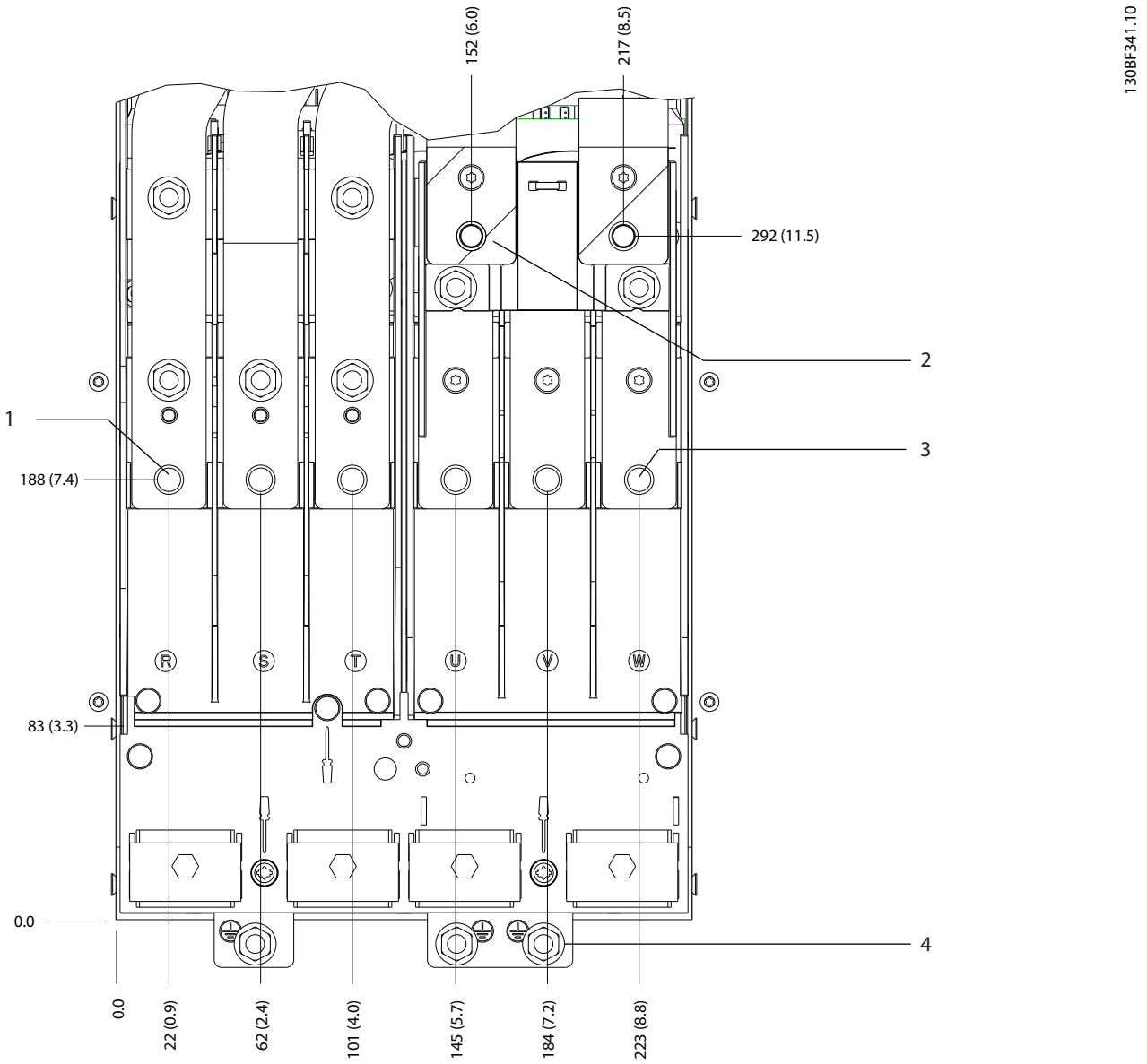

1	Mains terminals	3	Motor terminals
2	Brake terminals	4	Ground terminals

Illustration 8.18 D3h Terminal Dimensions (Front View)

 Danfoss A/S © 01/2018 All rights reserved.

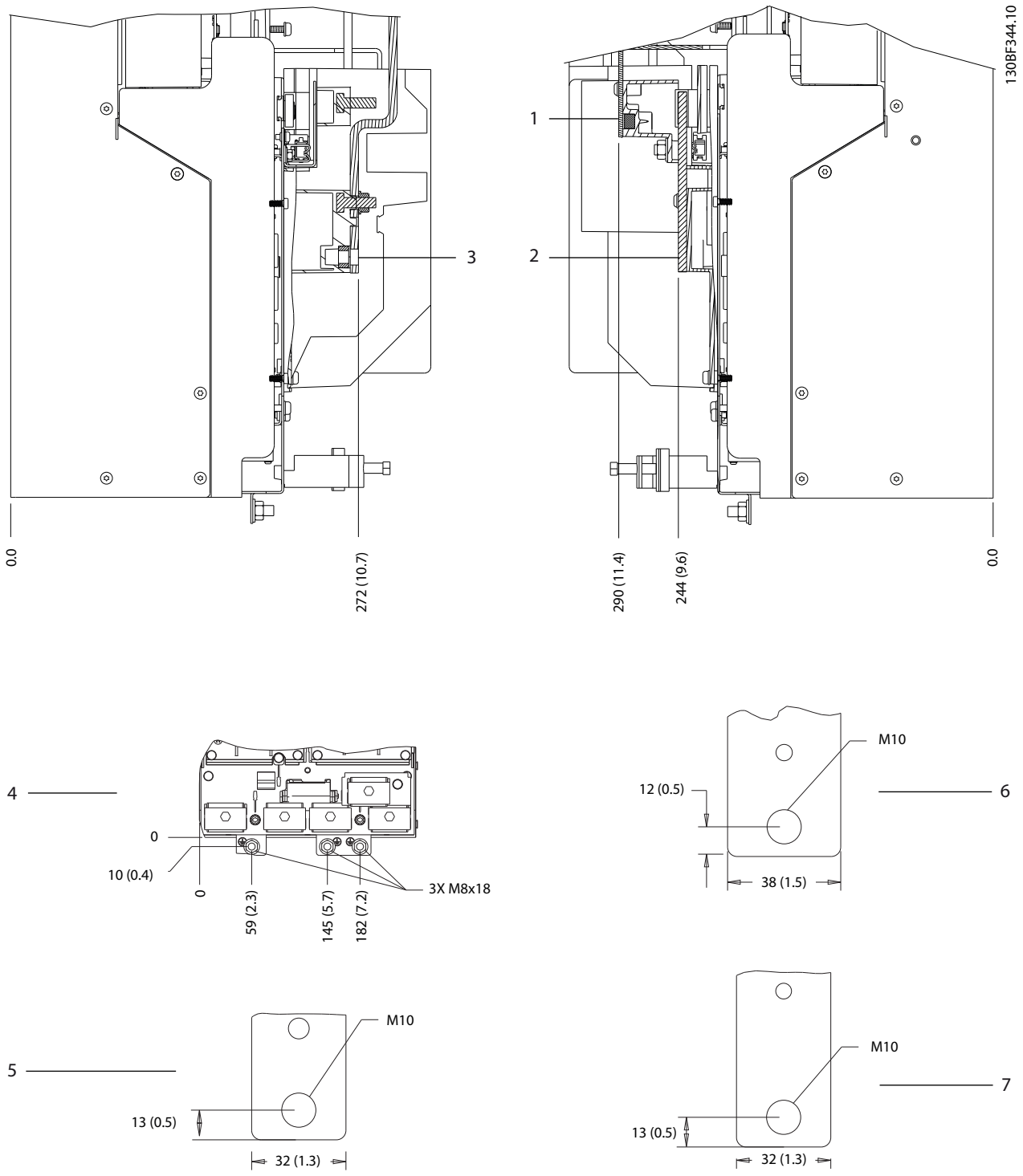

1 and 6	Bottom brake/regen terminals	3 and 5	Mains terminals
2 and 7	Motor terminals	4	Ground terminals

Illustration 8.19 D3h Terminal Dimensions (Side Views)

 Danfoss A/S © 01/2018 All rights reserved.

8.4 D4h Exterior and Terminal Dimensions

8.4.1 D4h Enclosure Dimensions

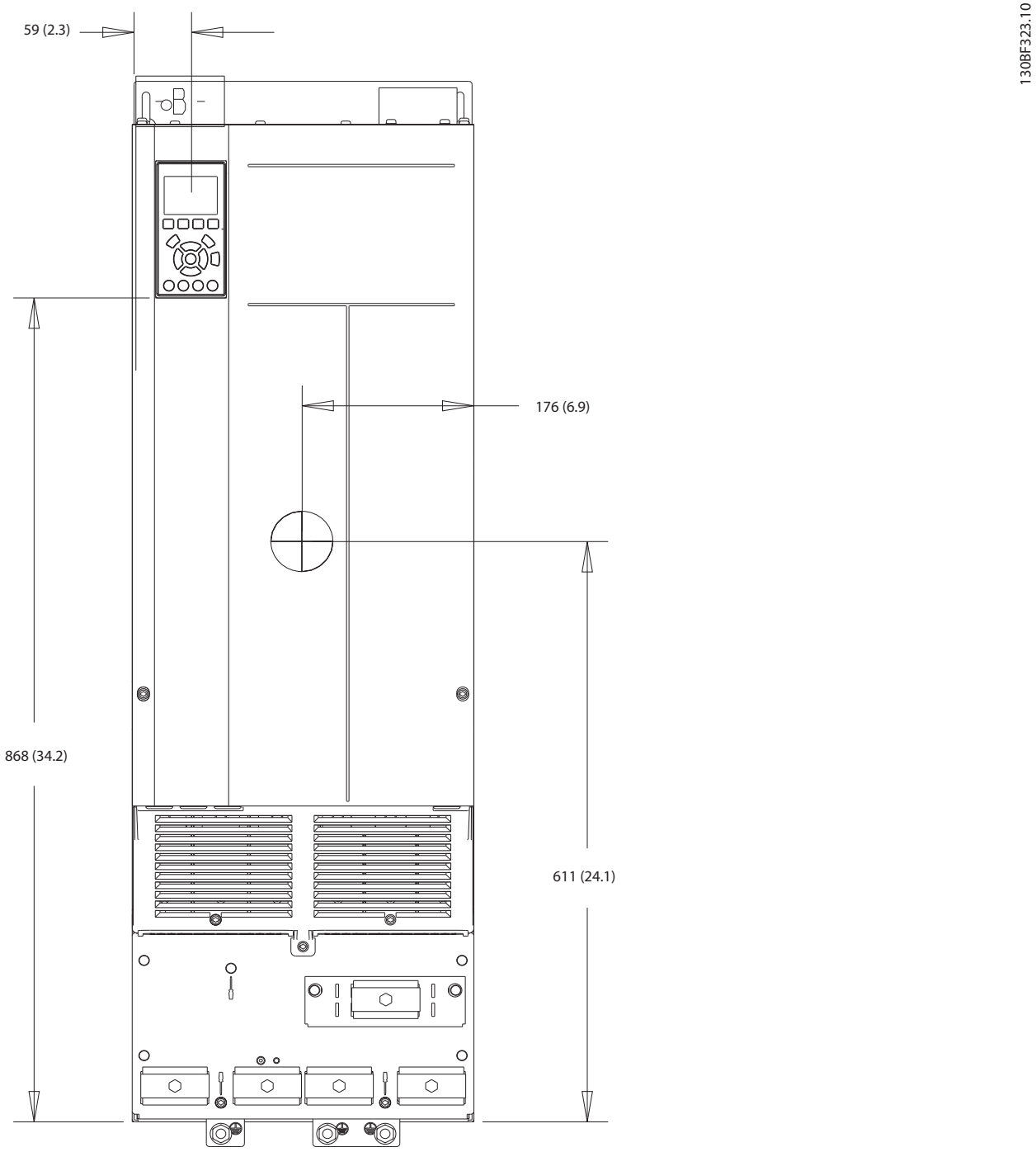

Illustration 8.20 Front View of D4h

 Danfoss A/S © 01/2018 All rights reserved.

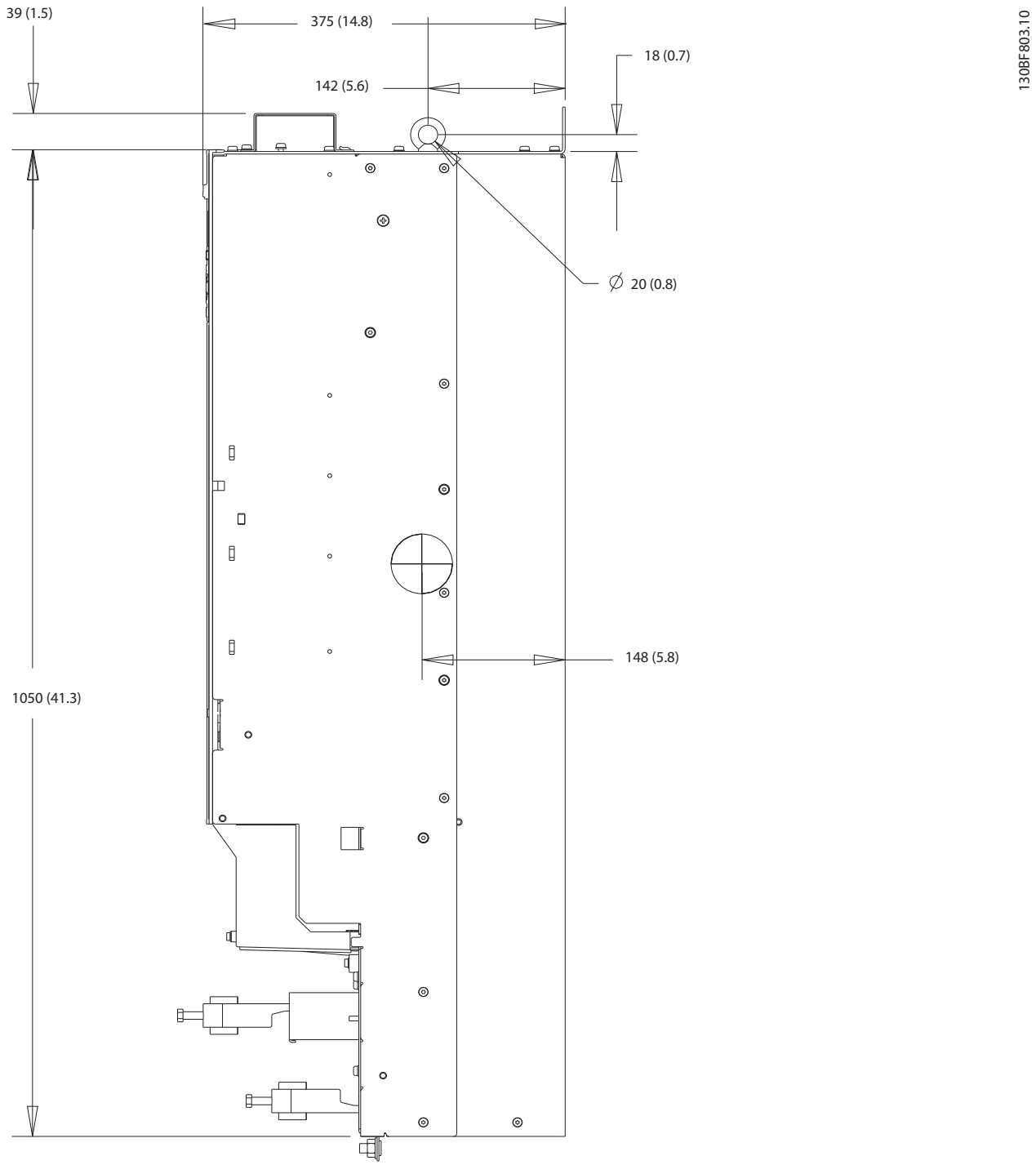

Illustration 8.21 Side Dimensions for D4h

 Danfoss A/S © 01/2018 All rights reserved.

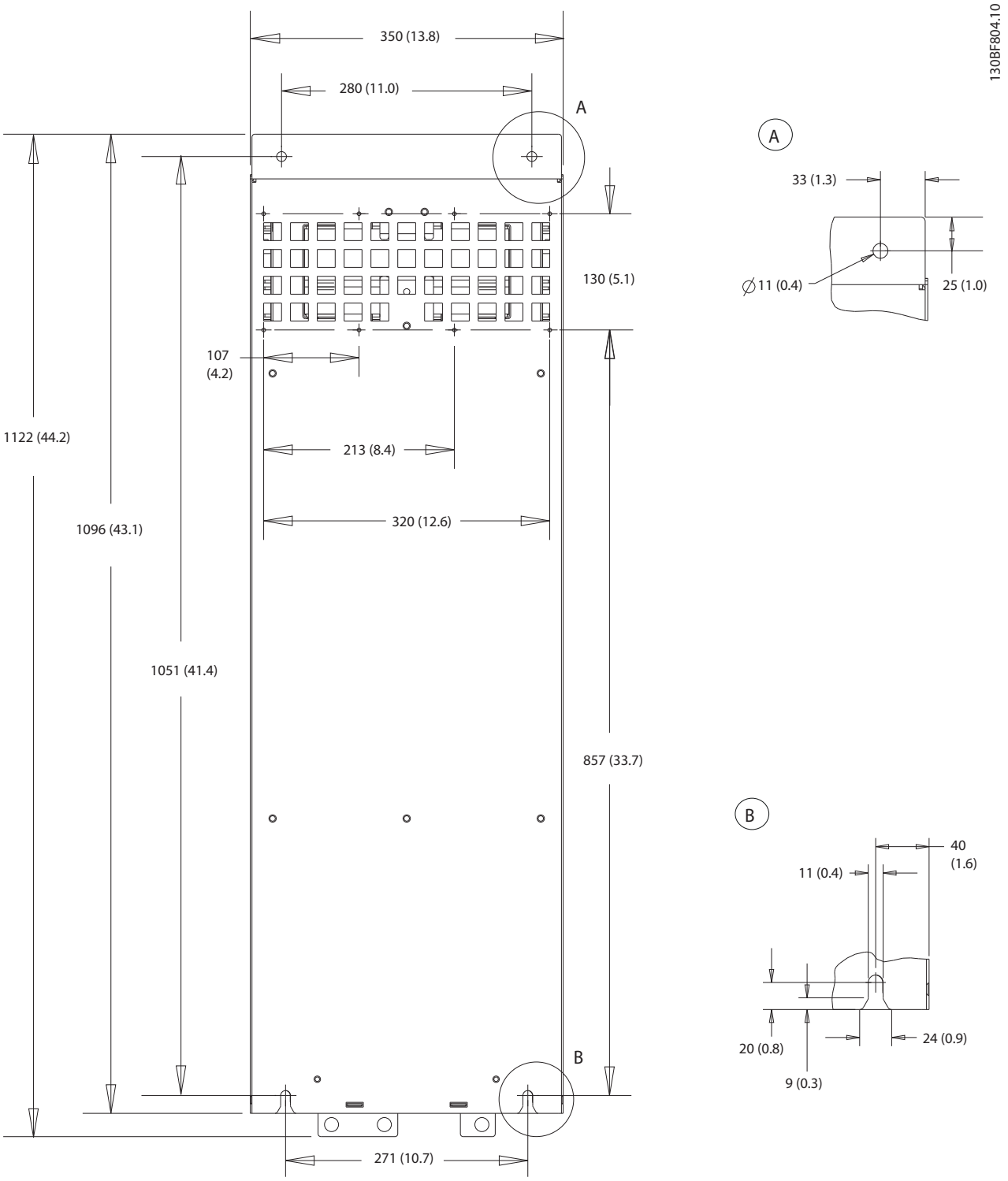

Illustration 8.22 Back Dimensions for D4h

Danfoss A/S © 01/2018 All rights reserved.

8.4.2 D4h Terminal Dimensions

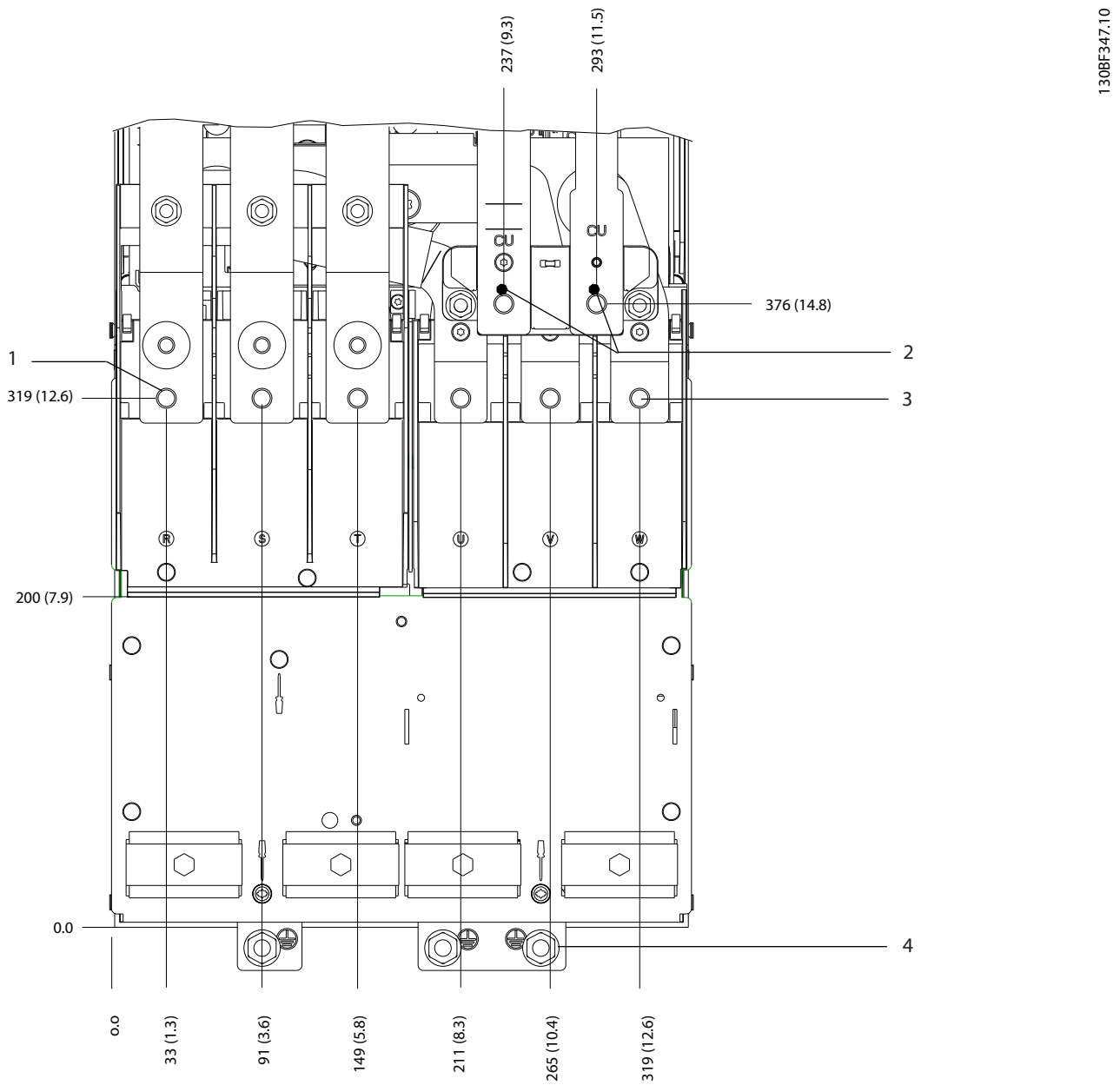

1	Mains terminals	3	Motor terminals
2	Brake terminals	4	Ground terminals

Illustration 8.23 D4h Terminal Dimensions (Front View)

 Danfoss A/S © 01/2018 All rights reserved.

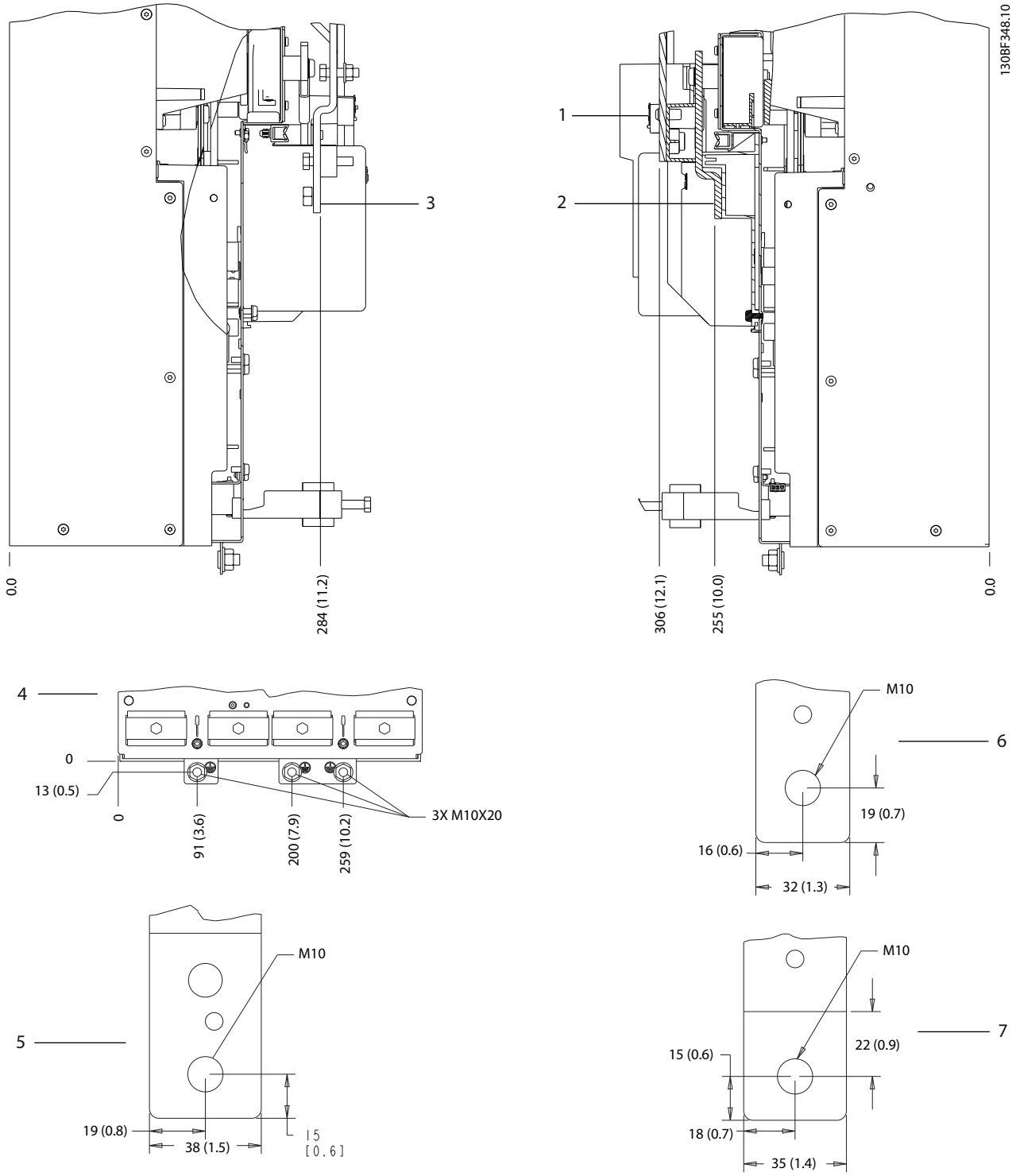

1 and 6	Brake/regeneration terminals	3 and 5	Mains terminals
2 and 7	Motor terminals	4	Ground terminals

Illustration 8.24 D4h Terminal Dimensions(Side Views)

 Danfoss A/S © 01/2018 All rights reserved.

8.5 D5h Exterior and Terminal Dimensions

8.5.1 D5h Exterior Dimensions

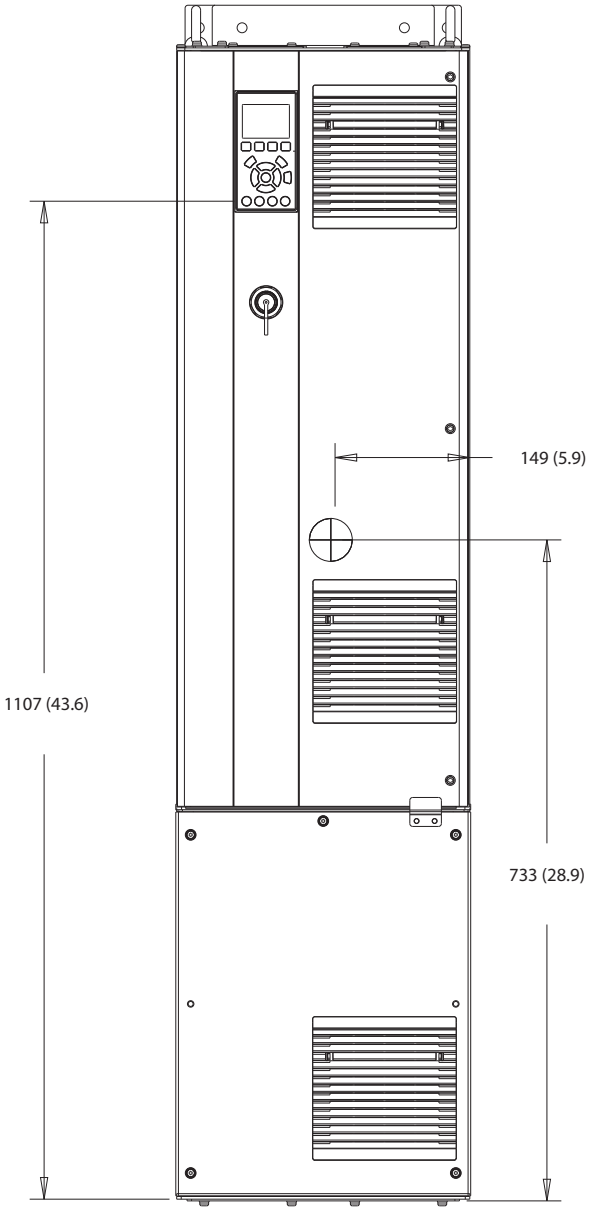

Illustration 8.25 Front View of D5h

 Danfoss A/S © 01/2018 All rights reserved.

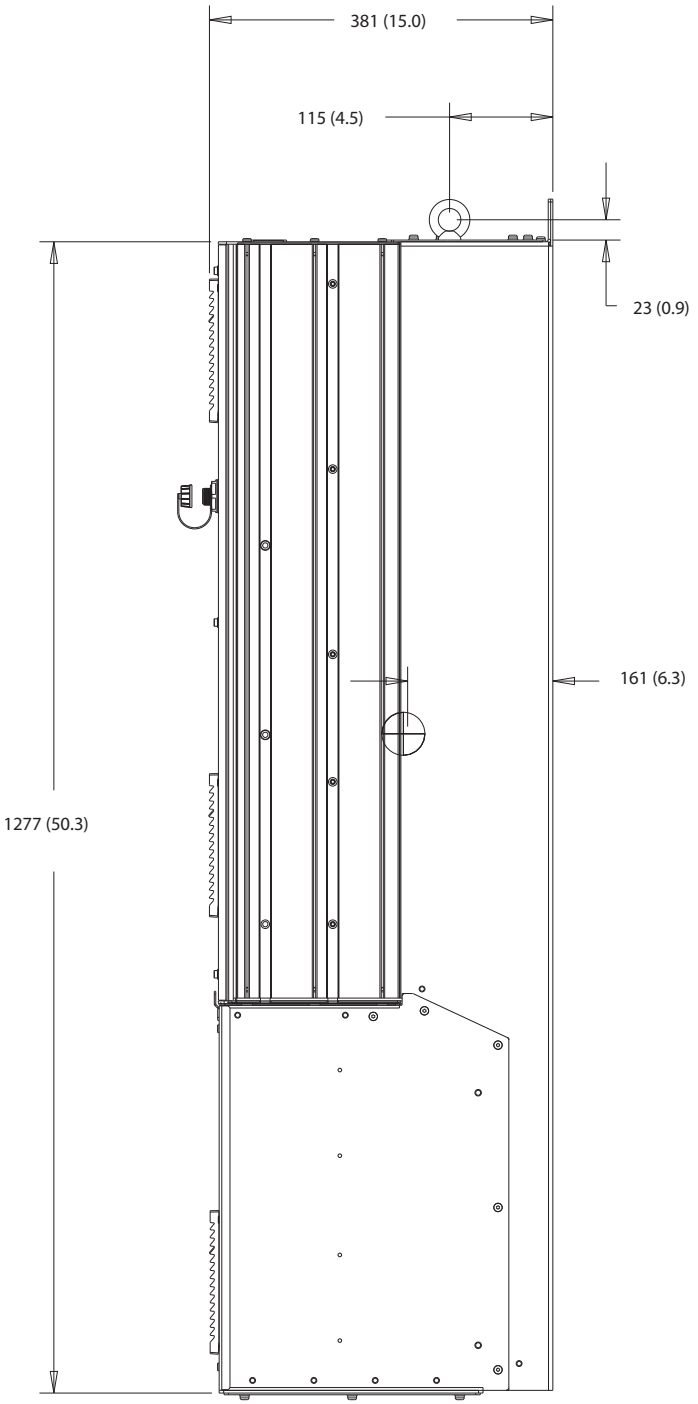

Illustration 8.26 Side View of D5h

 Danfoss A/S © 01/2018 All rights reserved.

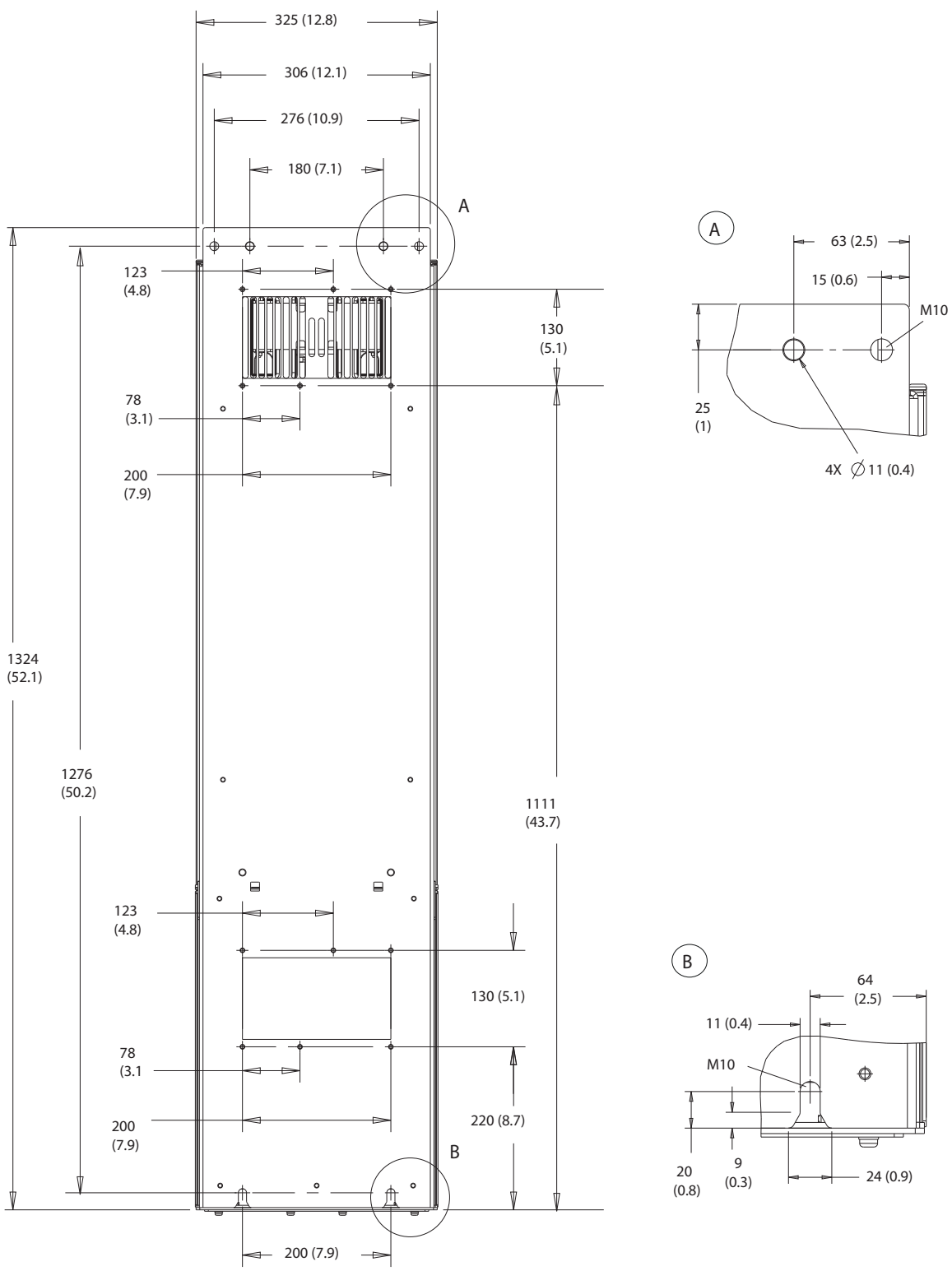

Illustration 8.27 Back View of D5h

 Danfoss A/S © 01/2018 All rights reserved.

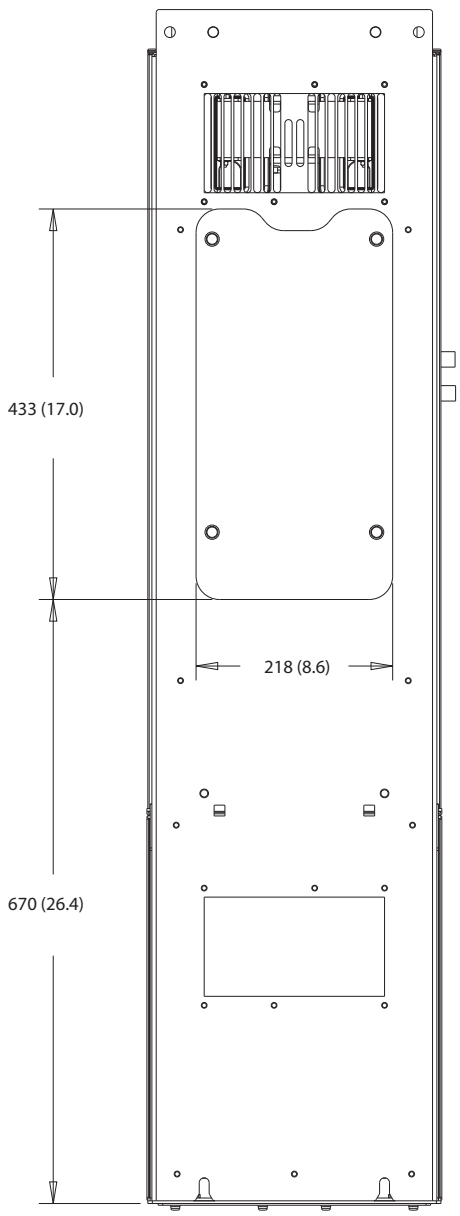

Illustration 8.28 Heat Sink Access Dimensions for D5h

 Danfoss A/S © 01/2018 All rights reserved.

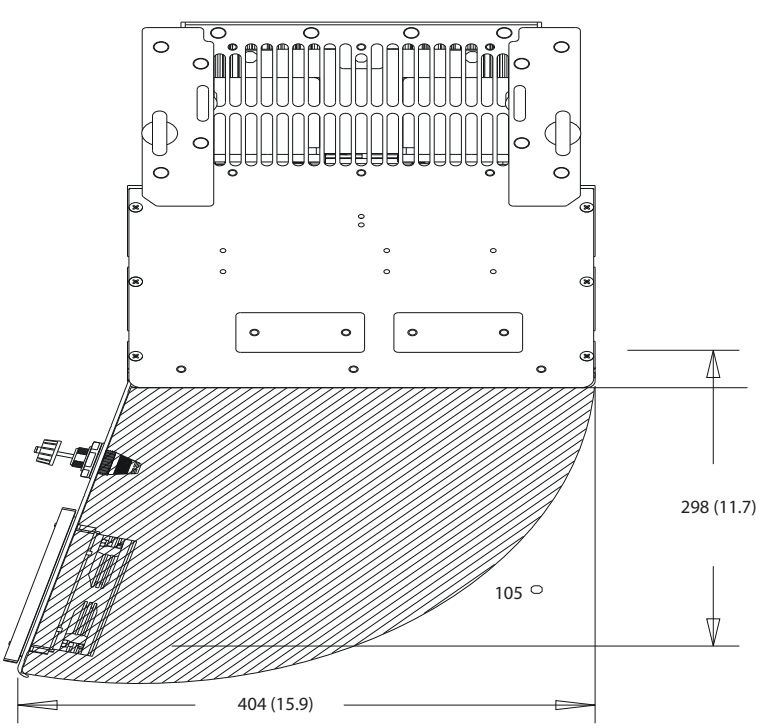

Illustration 8.29 Door Clearance for D5h

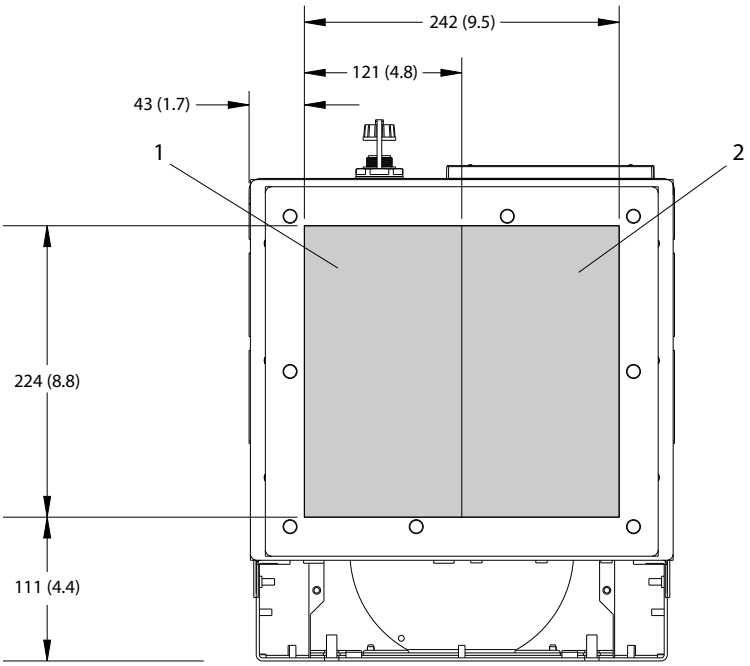

1	Mains side	2	Motor side

Illustration 8.30 Gland Plate Dimensions for D5h

 Danfoss A/S © 01/2018 All rights reserved.

8.5.2 D5h Terminal Dimensions

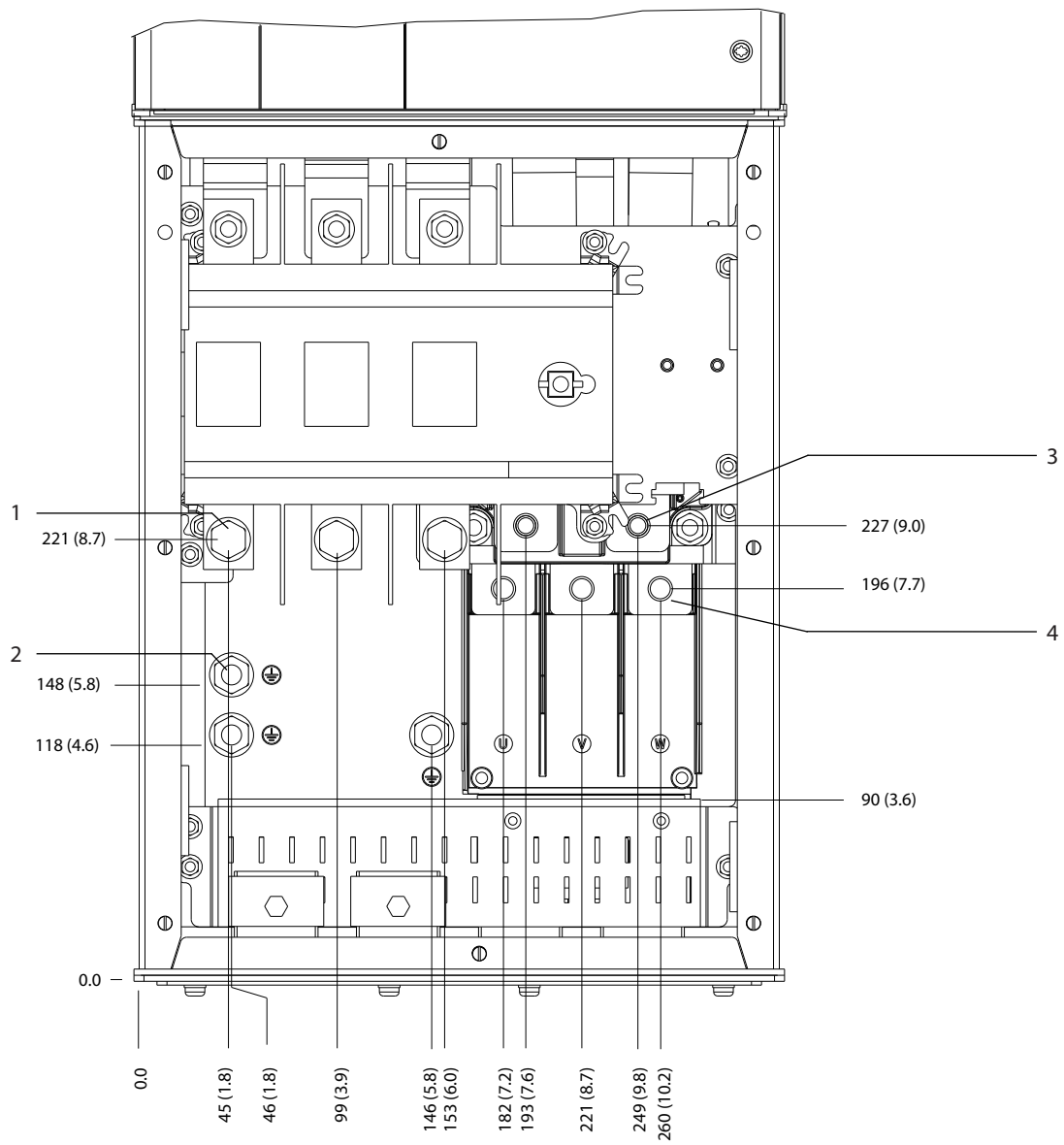

1	Mains terminals	3	Brake terminals
2	Ground terminals	4	Motor terminals

Illustration 8.31 D5h Terminal Dimensions with Disconnect Option (Front View)

 Danfoss A/S © 01/2018 All rights reserved.

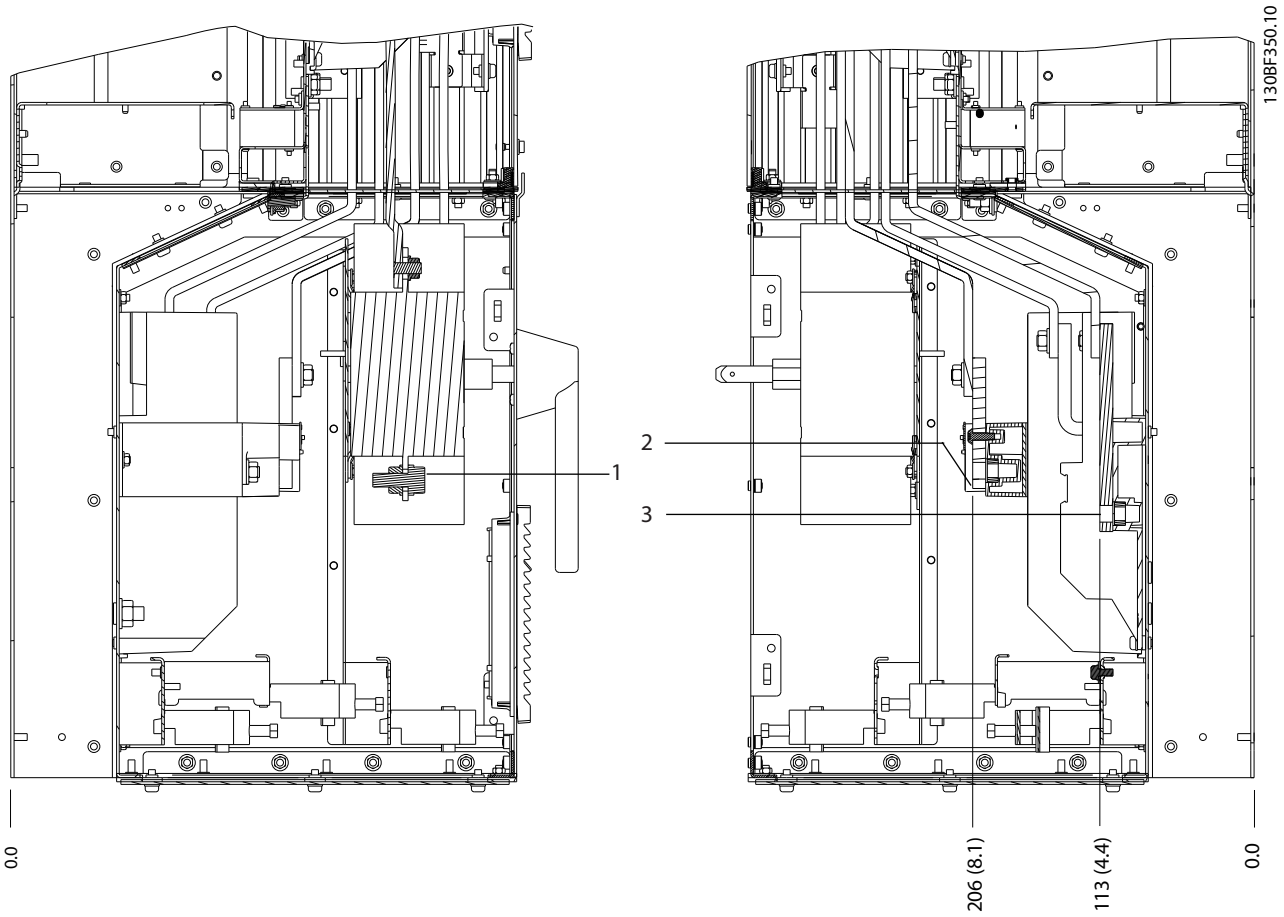

1	Mains terminals	3	Motor terminals
2	Brake terminals	–	–

Illustration 8.32 D5h Terminal Dimensions with Disconnect Option (Side Views)

 Danfoss A/S © 01/2018 All rights reserved.

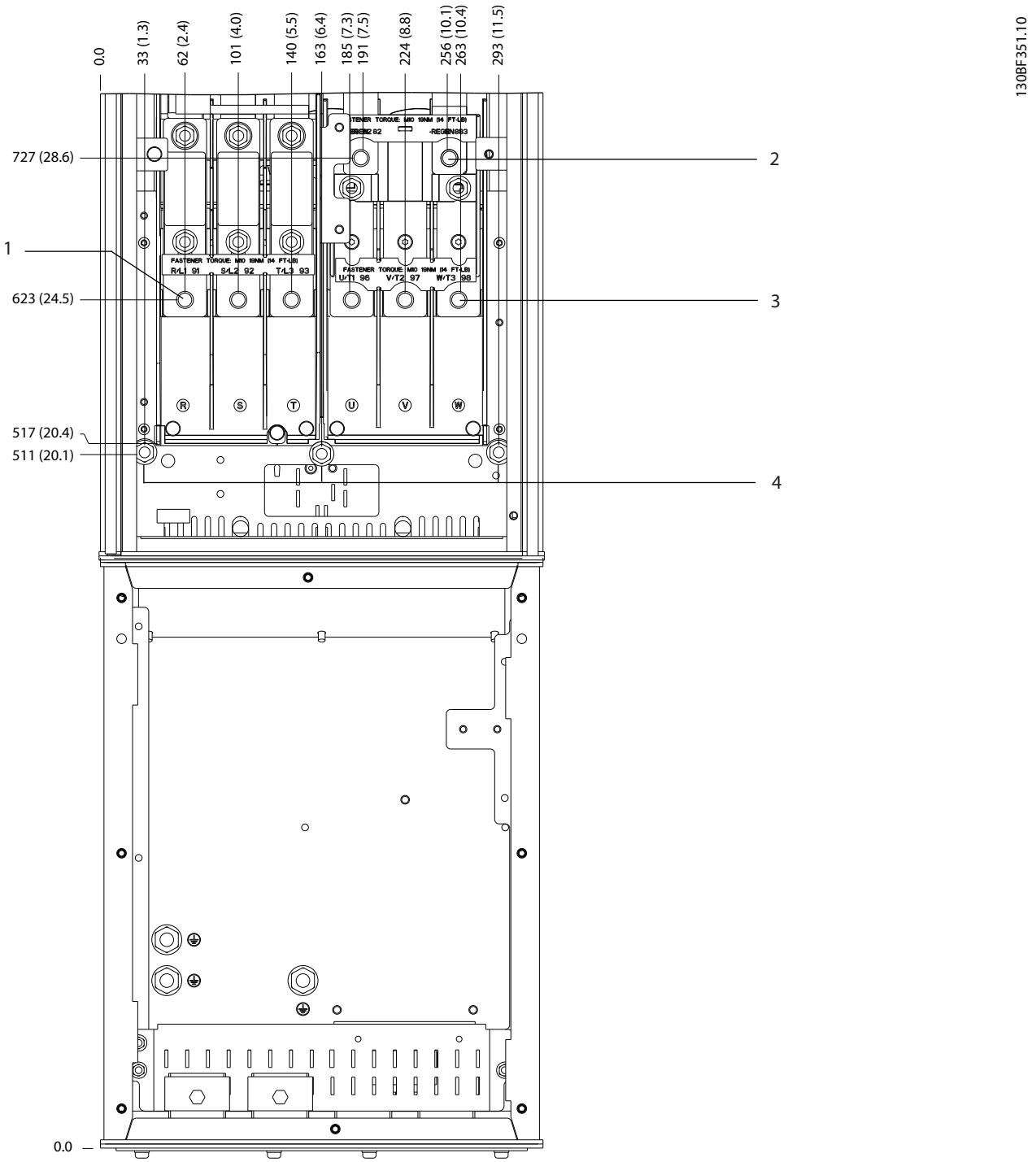

1	Mains terminals	3	Motor terminals
2	Brake terminals	4	Ground terminals

Illustration 8.33 D5h Terminal Dimensions with Brake Option (Front View)

 Danfoss A/S © 01/2018 All rights reserved.

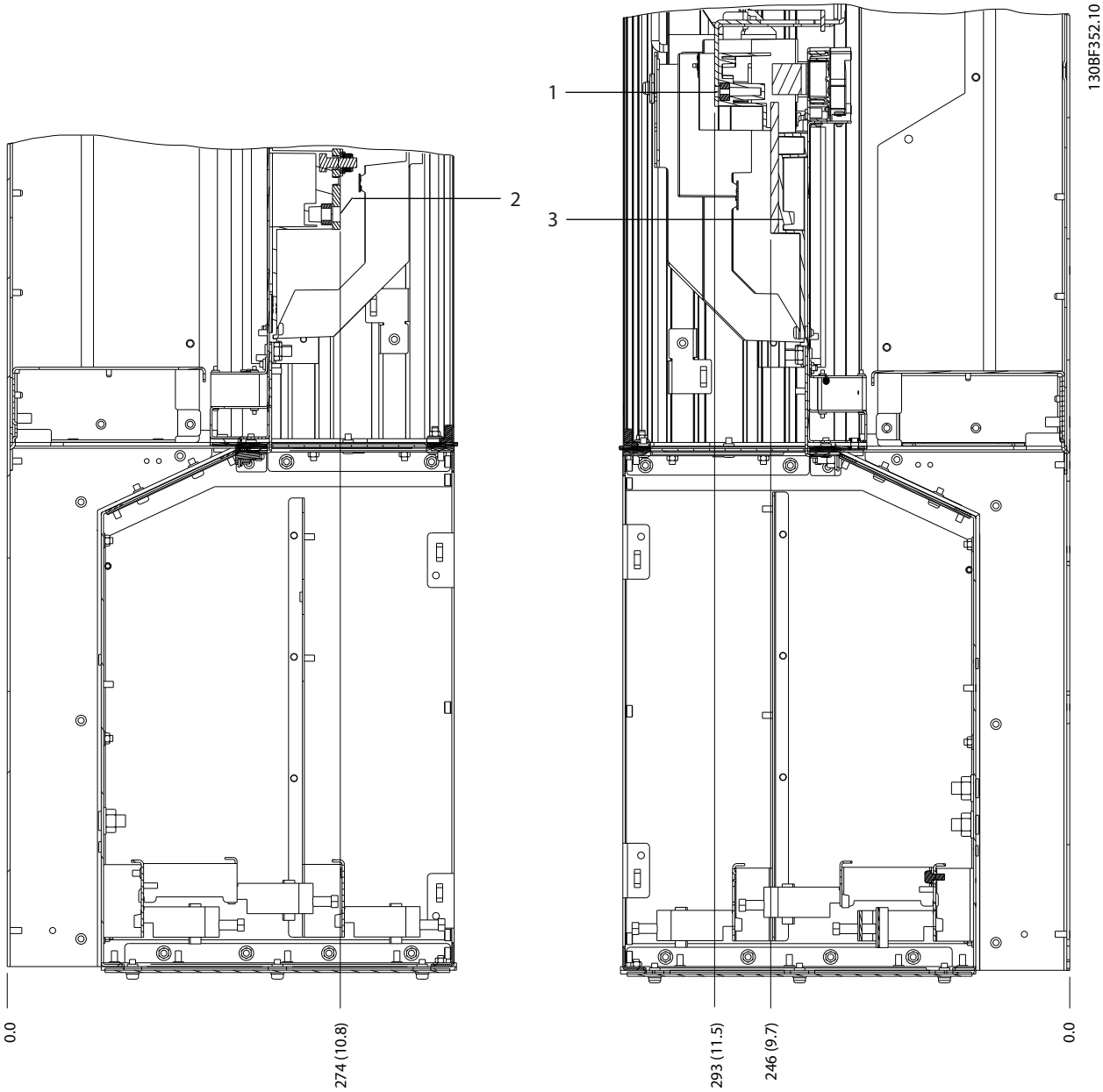

1	Mains terminals	3	Motor terminals
2	Brake terminals	–	–

Illustration 8.34 D5h Terminal Dimensionswith Brake Option (Side Views)

 Danfoss A/S © 01/2018 All rights reserved.

8.6 D6h Exterior and Terminal Dimensions

8.6.1 D6h Exterior Dimensions

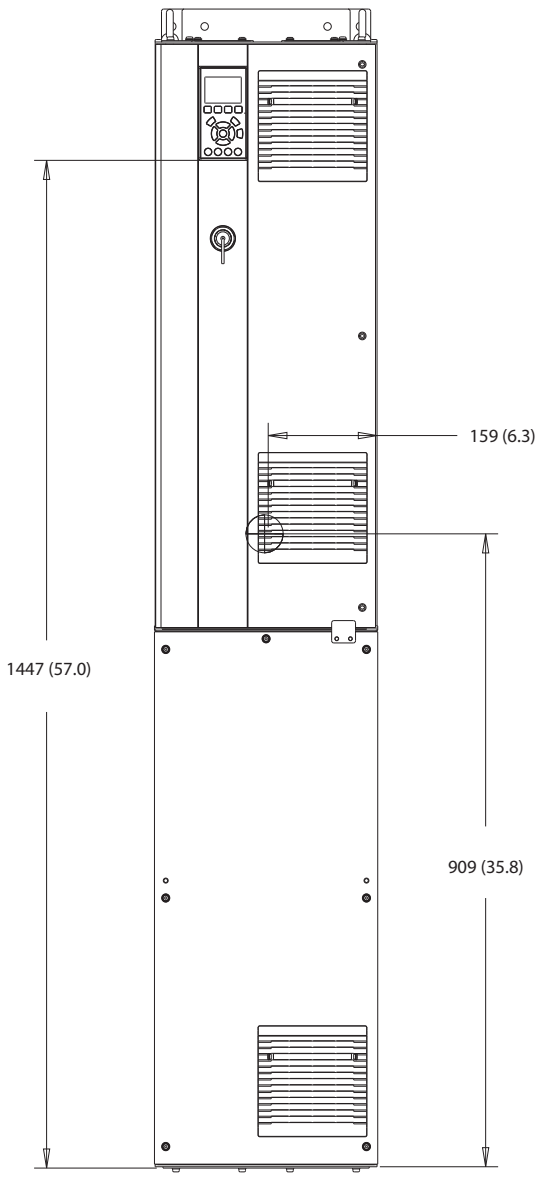

Illustration 8.35 Front View of D6h

 Danfoss A/S © 01/2018 All rights reserved.

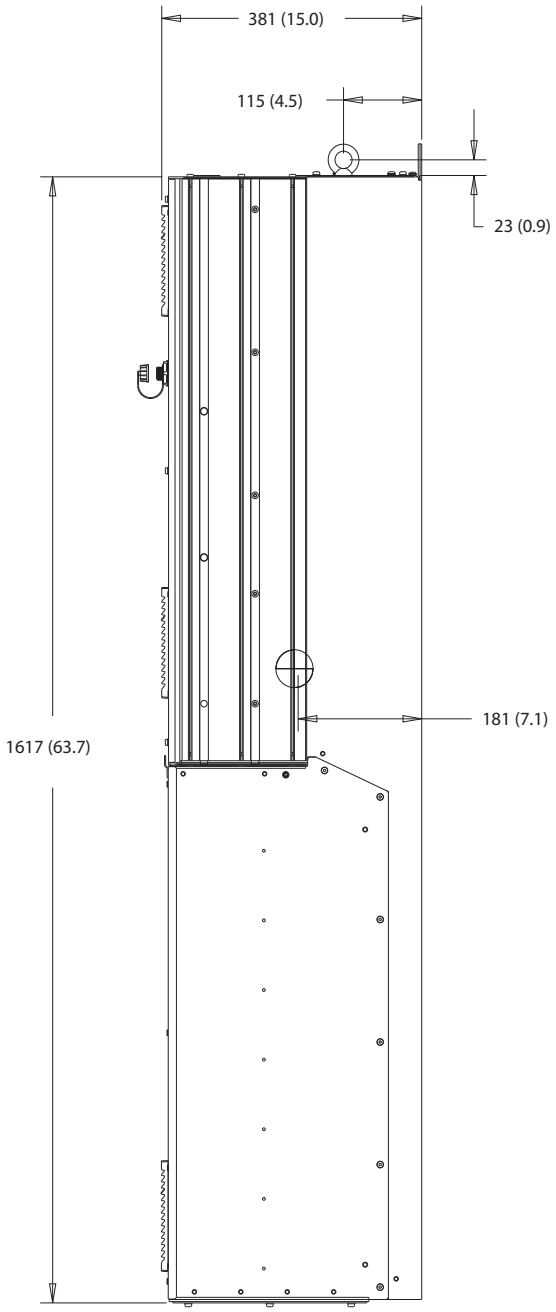

Illustration 8.36 Side View of D6h

 Danfoss A/S © 01/2018 All rights reserved.

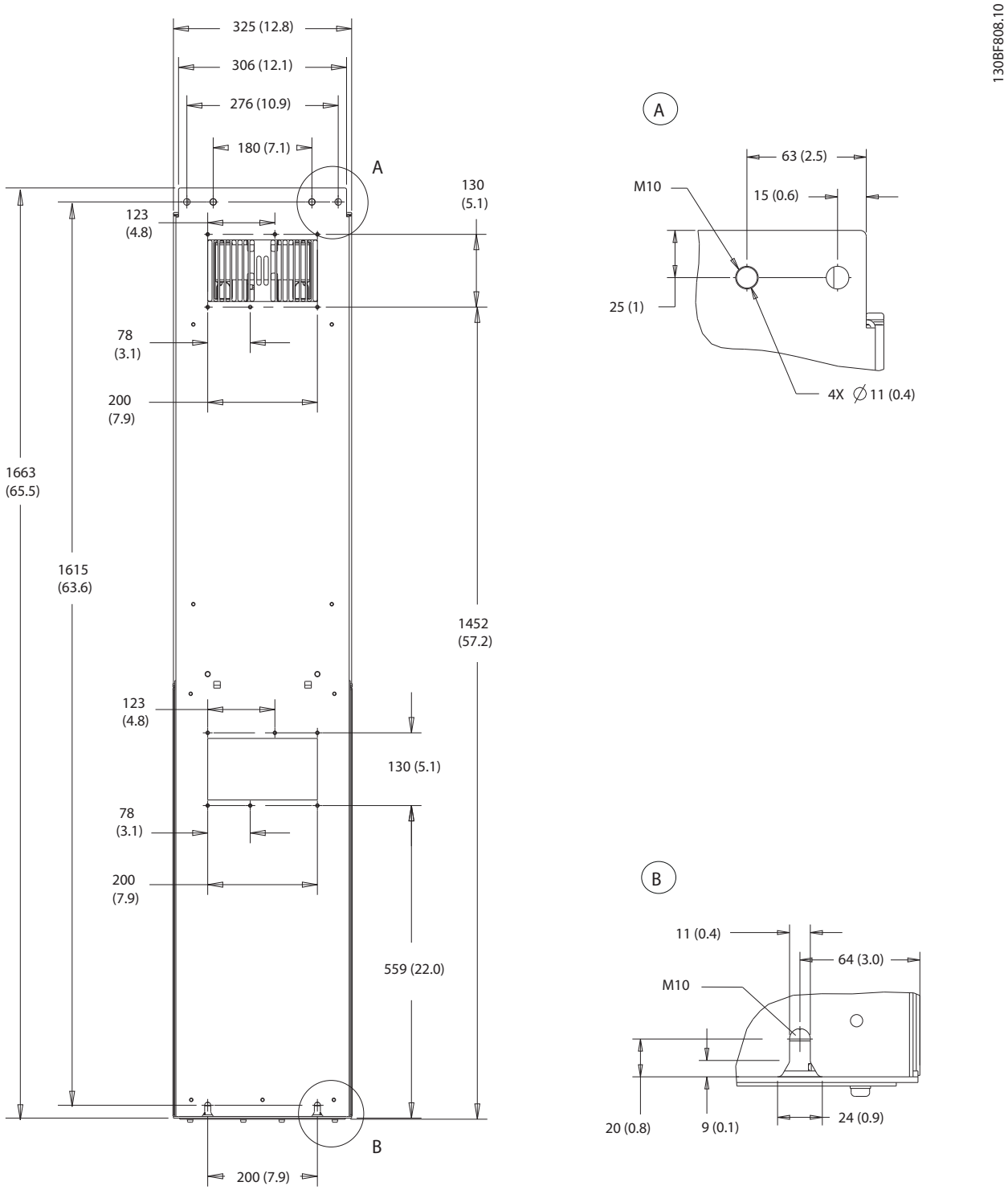

Illustration 8.37 Back View of D6h

 Danfoss A/S © 01/2018 All rights reserved.

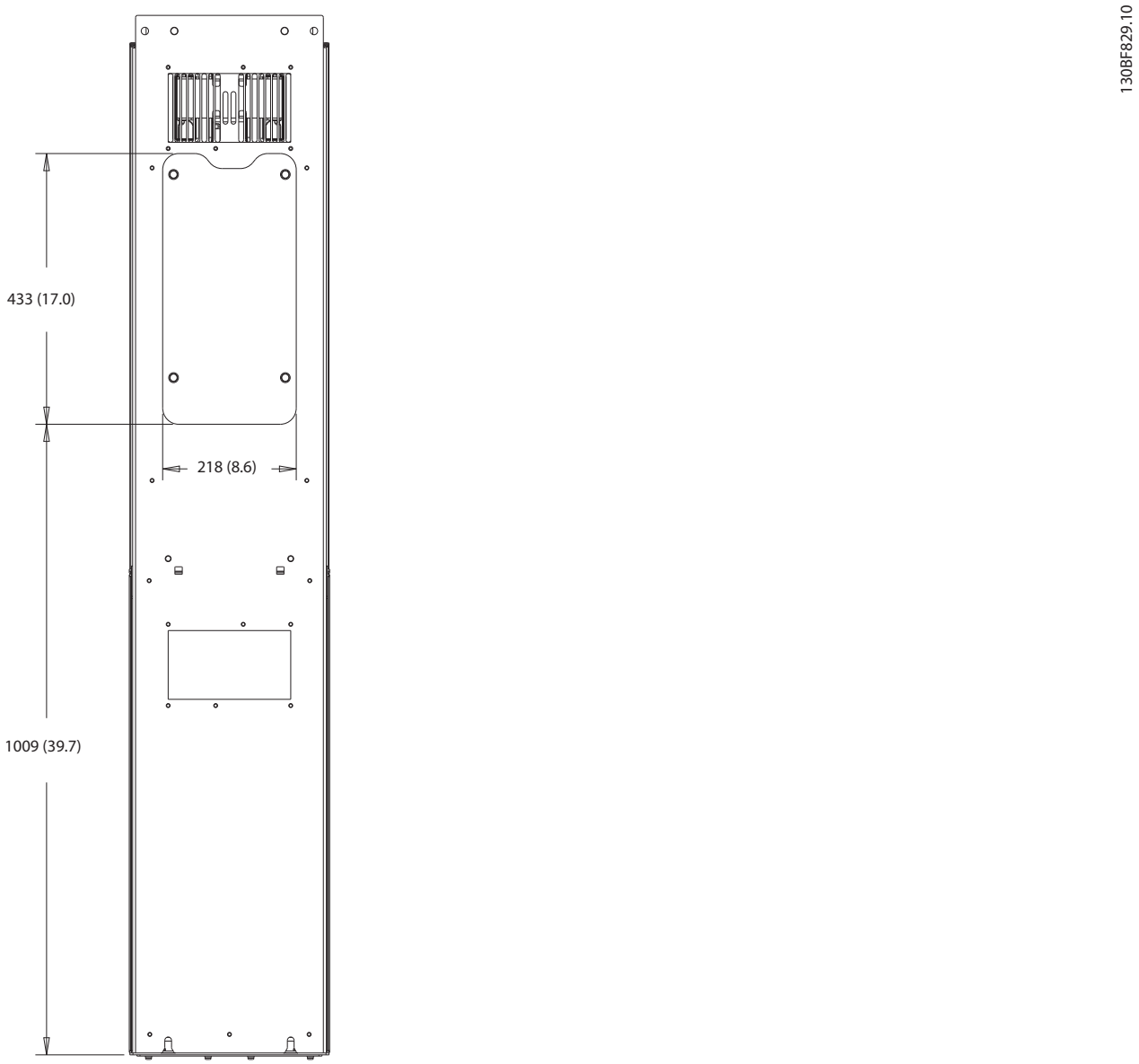

Illustration 8.38 Heat Sink Access Dimensions for D6h

 Danfoss A/S © 01/2018 All rights reserved.

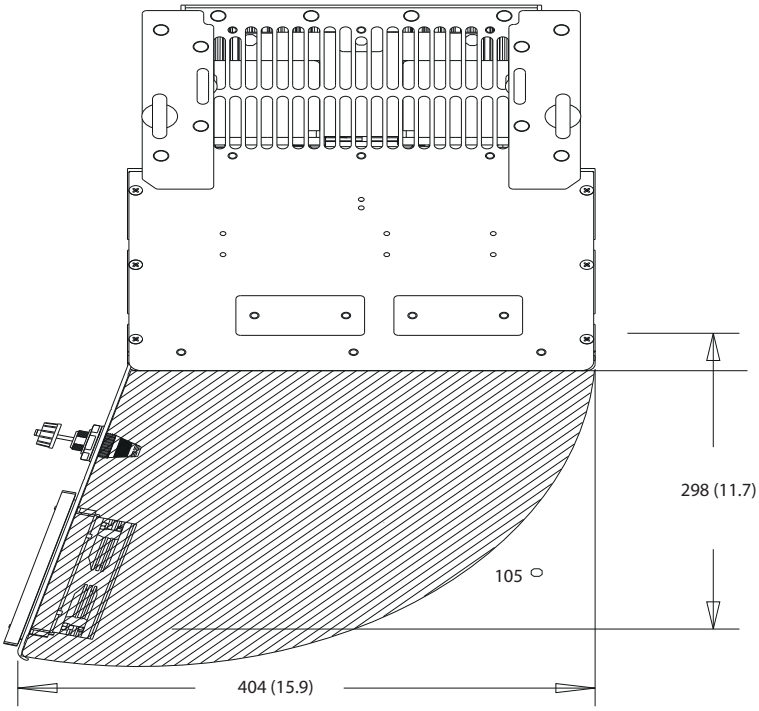

Illustration 8.39 Door Clearance for D6h

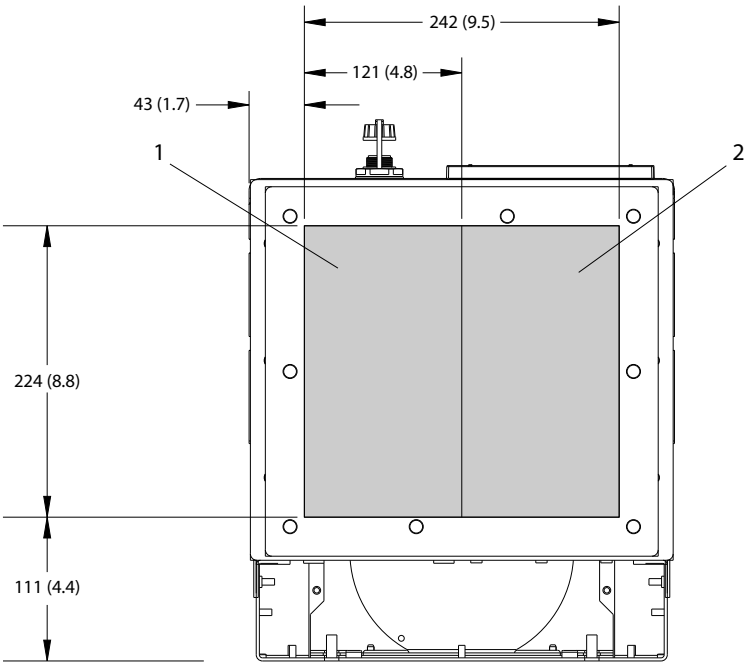

1	Mains side	2	Motor side

Illustration 8.40 Gland Plate Dimensions for D6h

 Danfoss A/S © 01/2018 All rights reserved.

8.6.2 D6h Terminal Dimensions

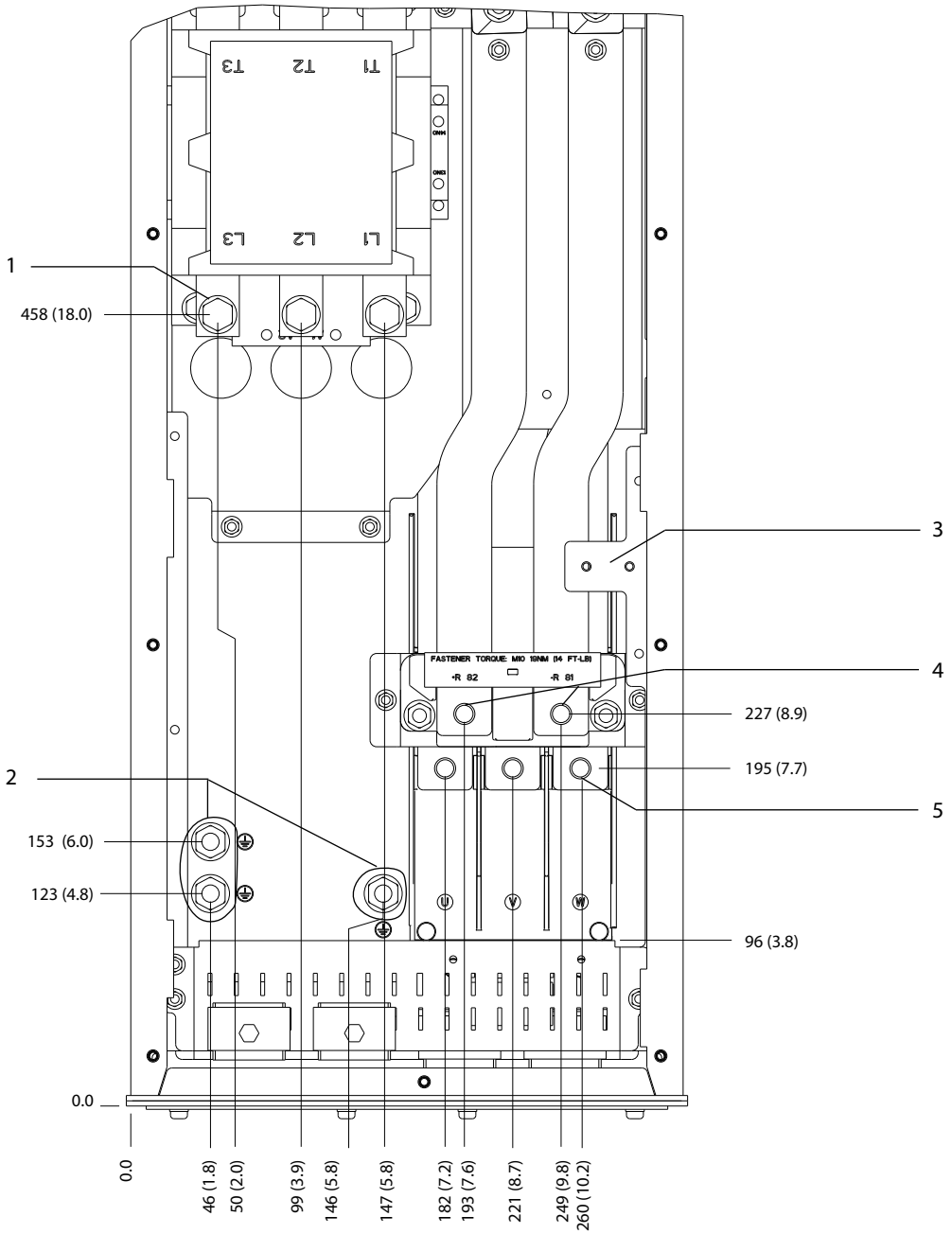

1	Mains terminals	4	Brake terminals
2	Ground terminals	5	Motor terminals
3	TB6 terminal block for contactor	–	–

Illustration 8.41 D6h Terminal Dimensions with Contactor Option (Front View)

 Danfoss A/S © 01/2018 All rights reserved.

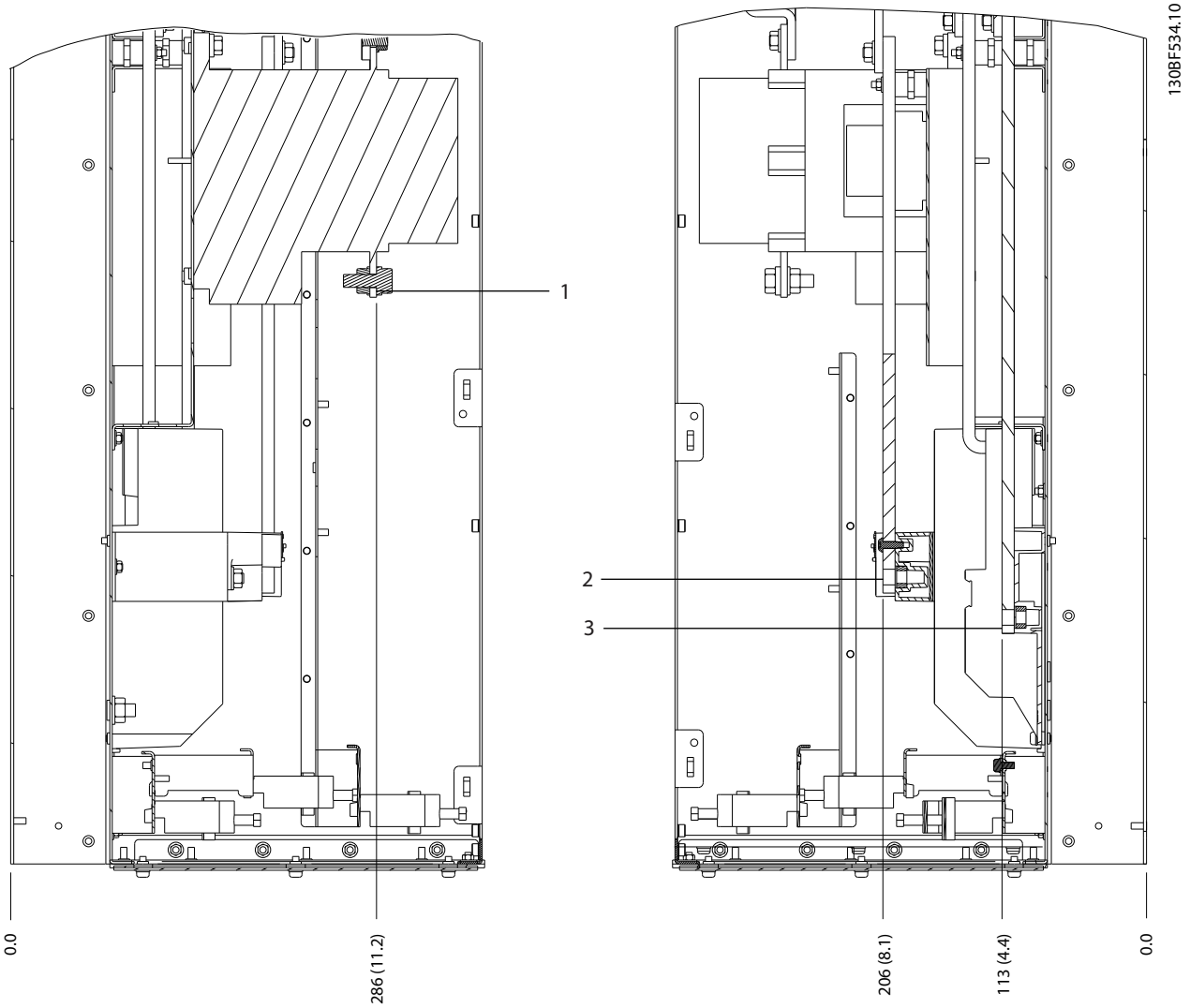

1	Mains terminals	3	Motor terminals
2	Brake terminals	–	–

Illustration 8.42 D6h Terminal Dimensions with Contactor Option (Side Views)

 Danfoss A/S © 01/2018 All rights reserved.

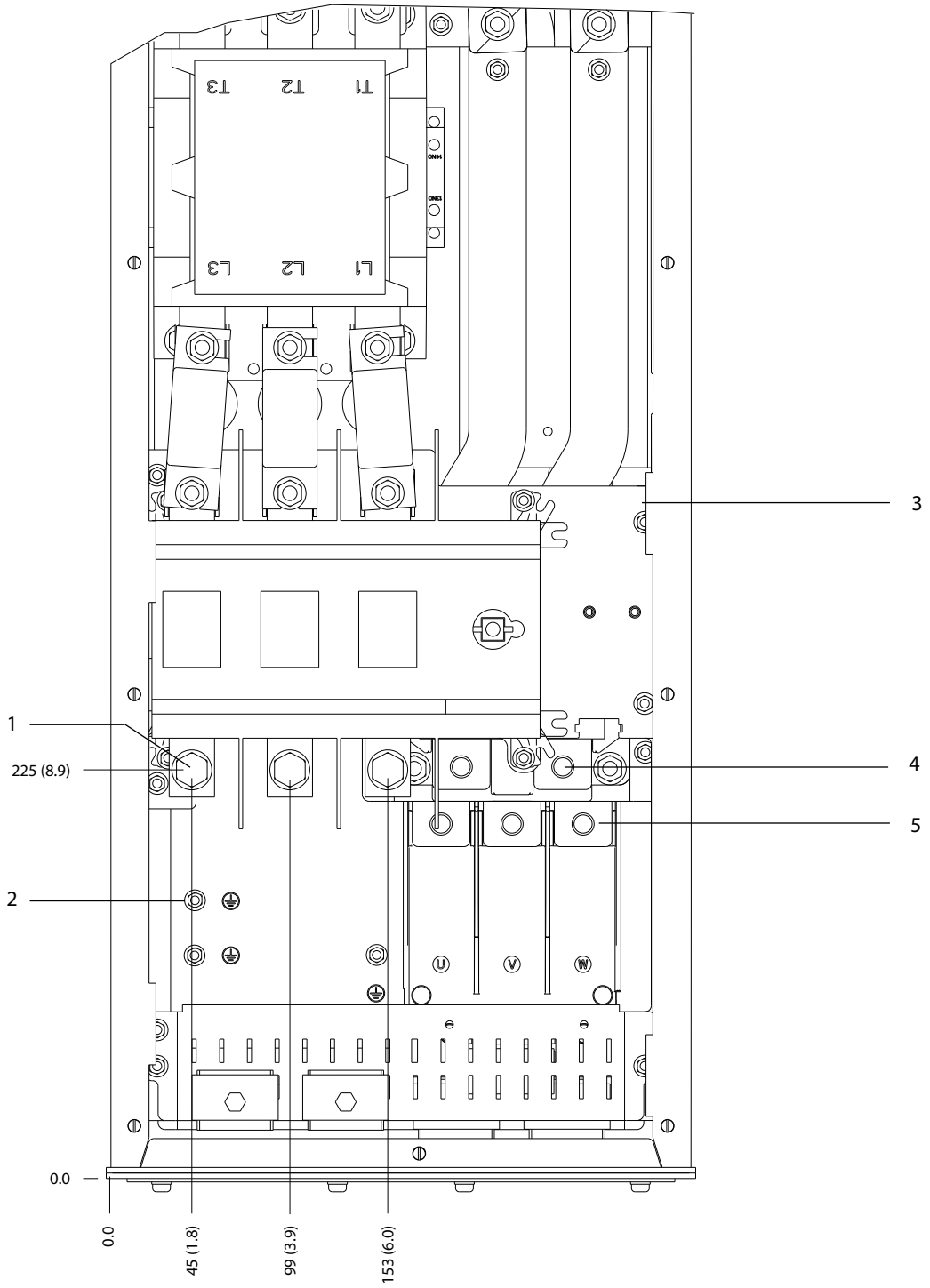

1	Mains terminals	4	Brake terminals
2	Ground terminals	5	Motor terminals
3	TB6 terminal block for contactor	–	–

Illustration 8.43 D6h Terminal Dimensions with Contactor and Disconnect Options (Front View)

 Danfoss A/S © 01/2018 All rights reserved.

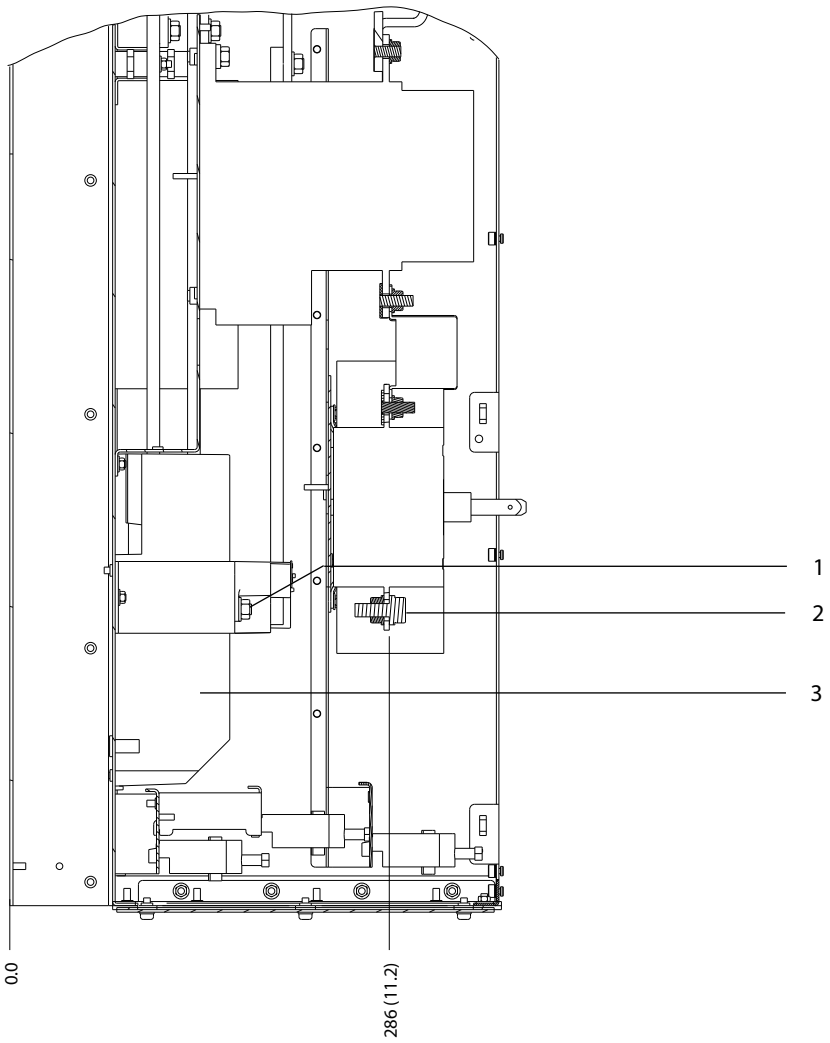

1	Brake terminals	3	Motor terminals
2	Mains terminals	–	–

Illustration 8.44 D6h Terminal Dimensions with Contactor and Disconnect Options (Side Views)

 Danfoss A/S © 01/2018 All rights reserved.

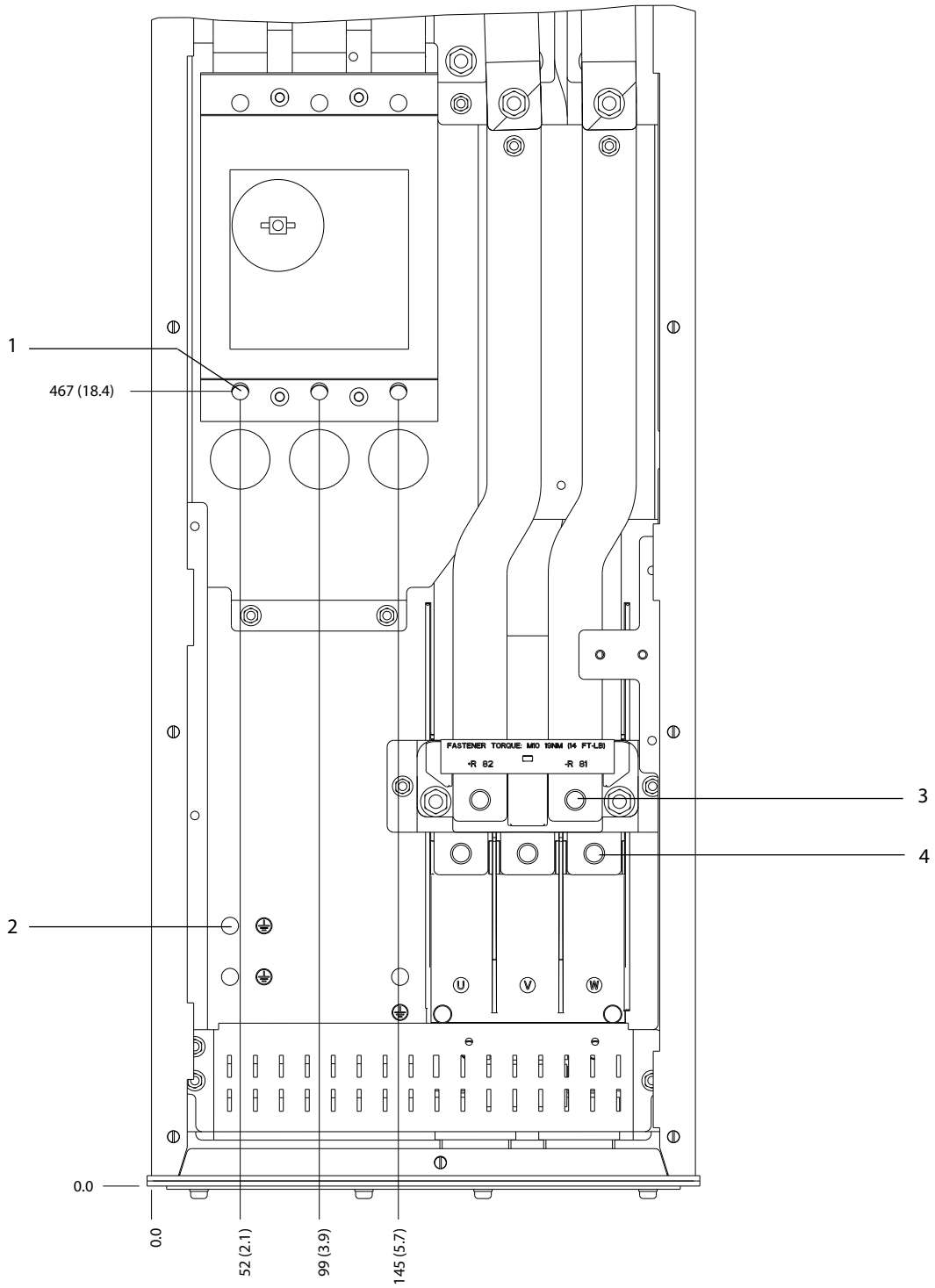

1	Mains terminals	3	Brake terminals
2	Ground terminals	4	Motor terminals

Illustration 8.45 D6h Terminal Dimensions with Circuit Breaker Option (Front View)

 Danfoss A/S © 01/2018 All rights reserved.

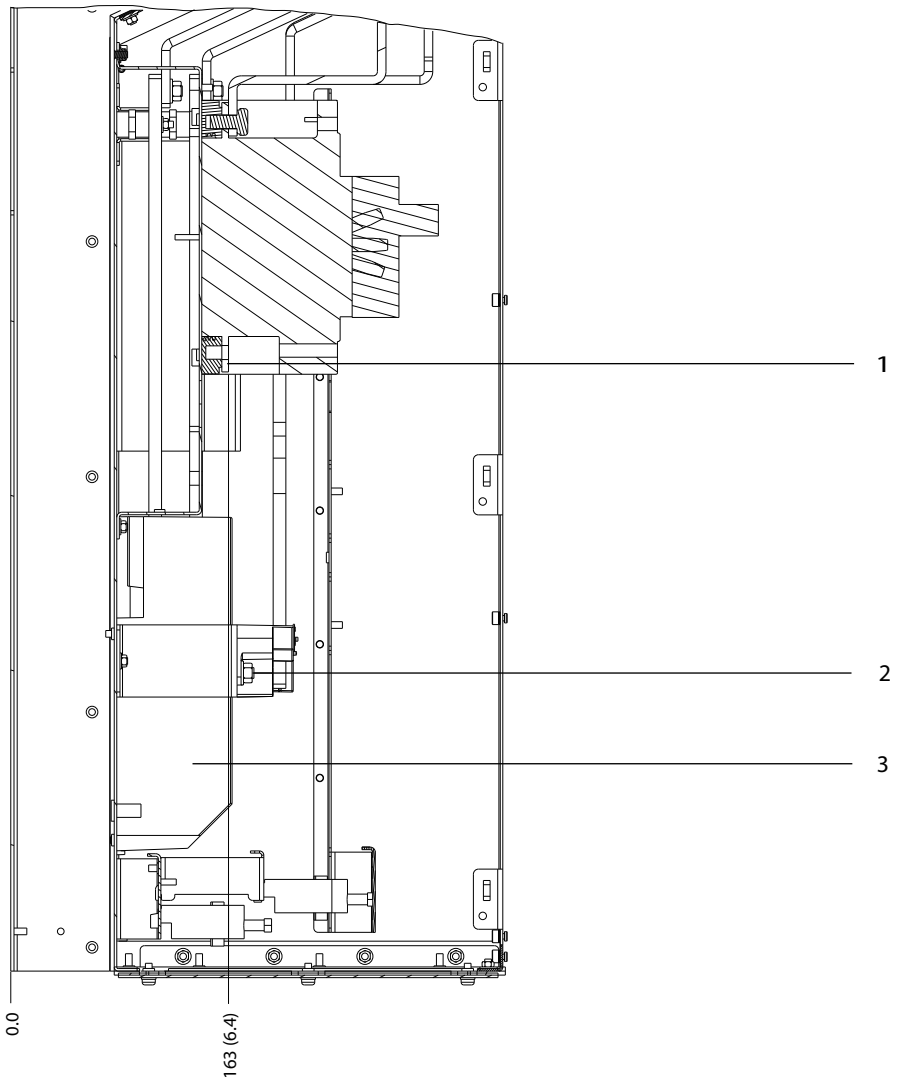

1	Mains terminals	3	Motor terminals
2	Brake terminals	–	–

Illustration 8.46 D6h Terminal Dimensions with Circuit Breaker Option (Side Views)

 Danfoss A/S © 01/2018 All rights reserved.

8.7 D7h Exterior and Terminal Dimensions

8.7.1 D7h Exterior Dimensions

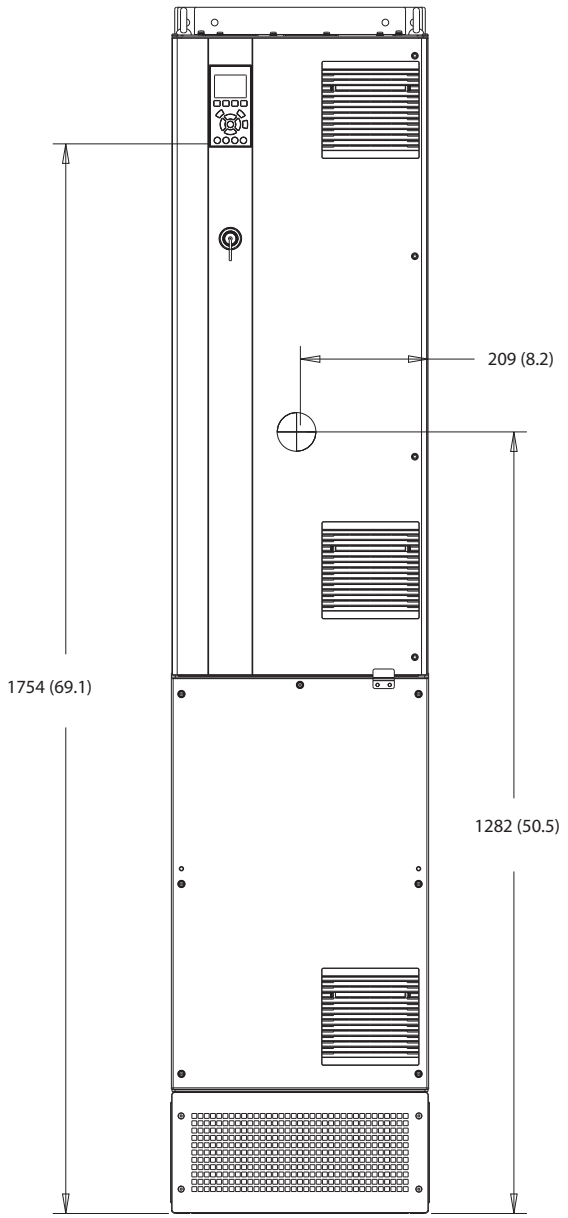

Illustration 8.47 Front View of D7h

 Danfoss A/S © 01/2018 All rights reserved.

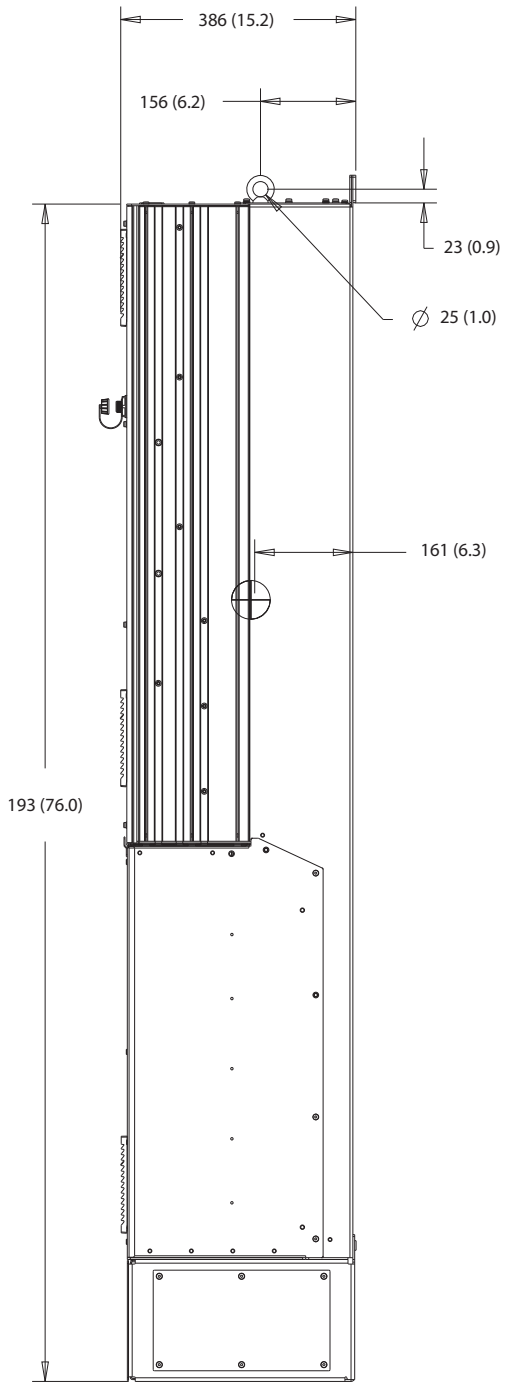

Illustration 8.48 Side View of D7h

 Danfoss A/S © 01/2018 All rights reserved.

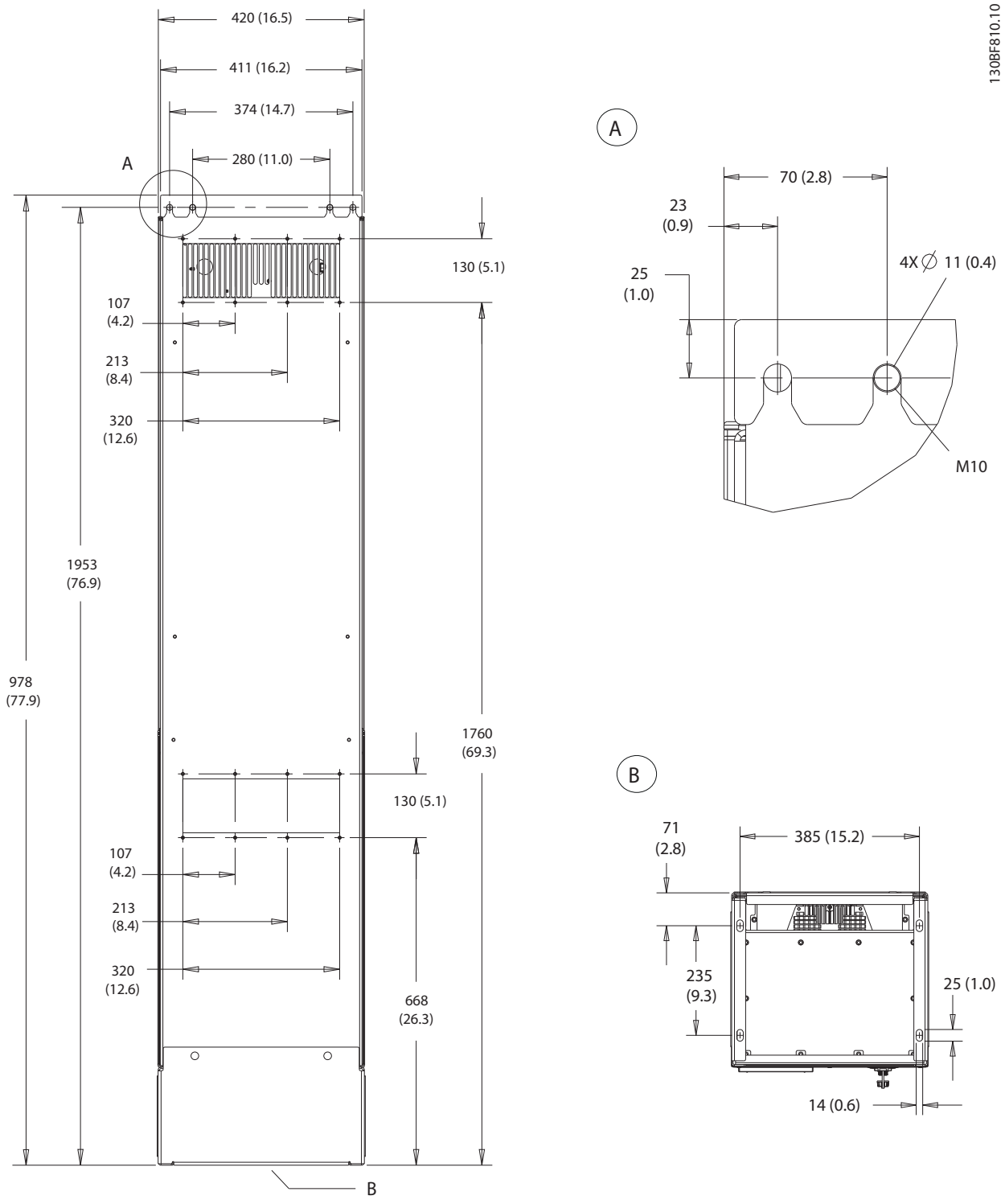

Illustration 8.49 Back View of D7h

 Danfoss A/S © 01/2018 All rights reserved.

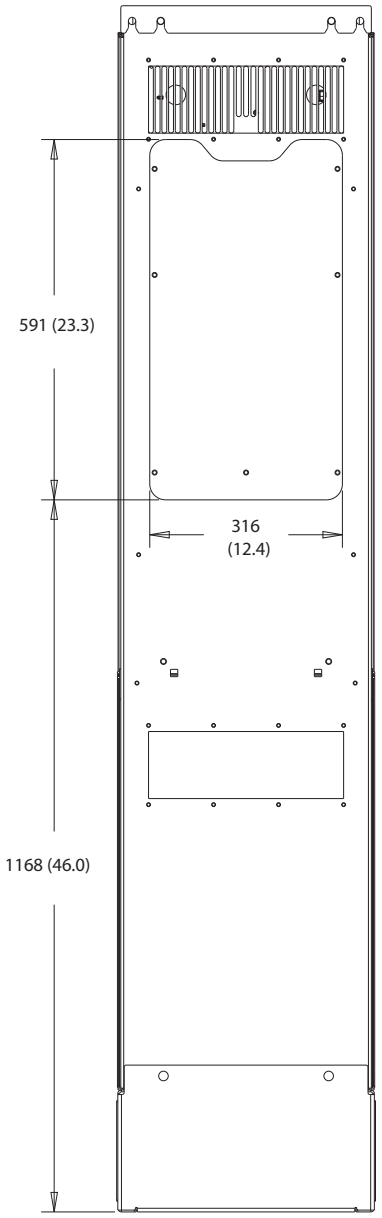

Illustration 8.50 Heat Sink Access Dimensions for D7h

 Danfoss A/S © 01/2018 All rights reserved.

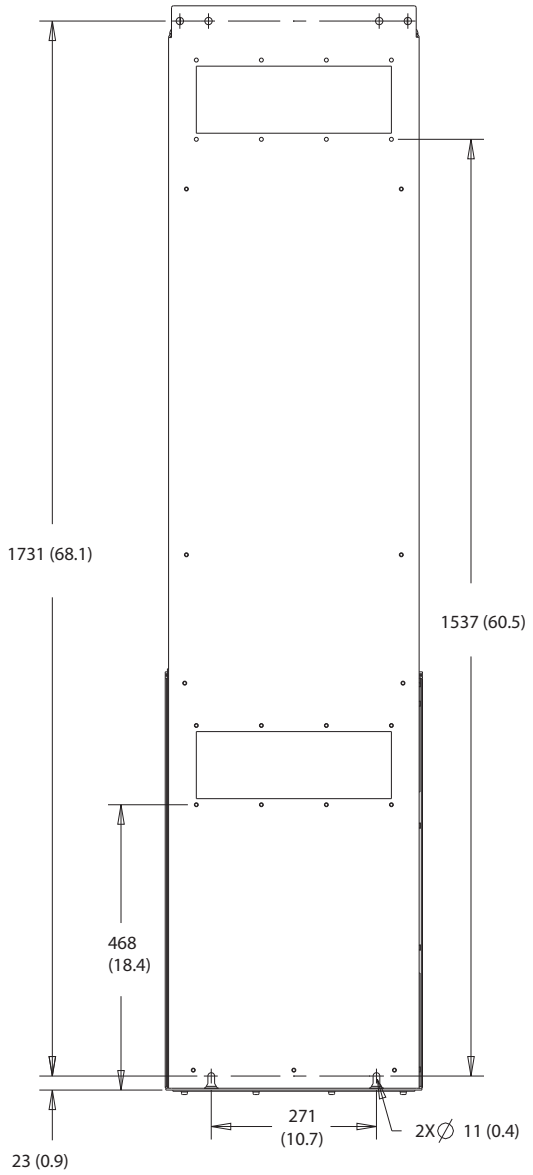

Illustration 8.51 Wall Mount Dimensions for D7h

 Danfoss A/S © 01/2018 All rights reserved.

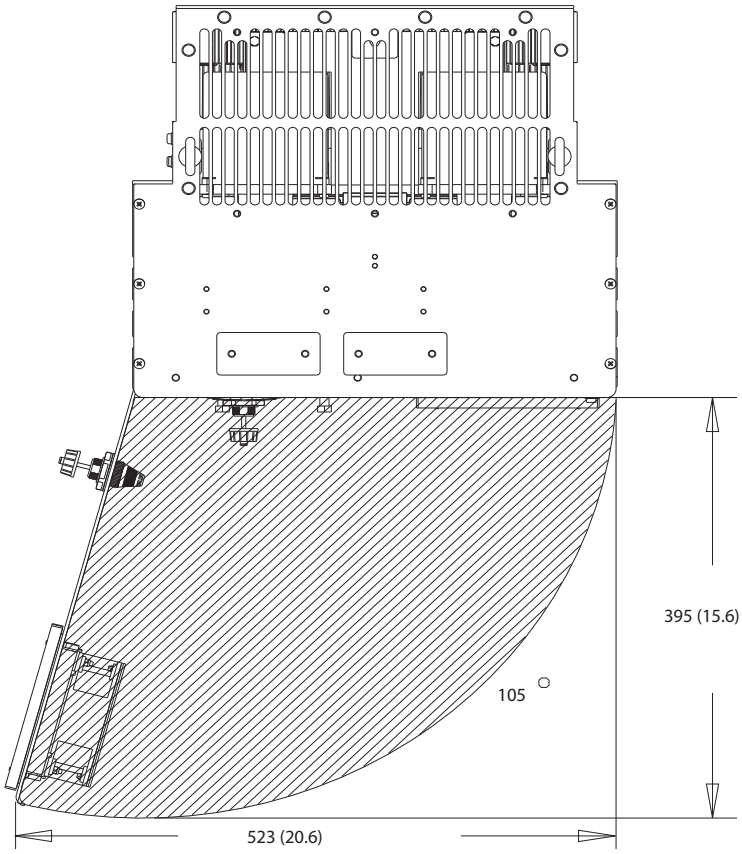

Illustration 8.52 Door Clearance for D7h

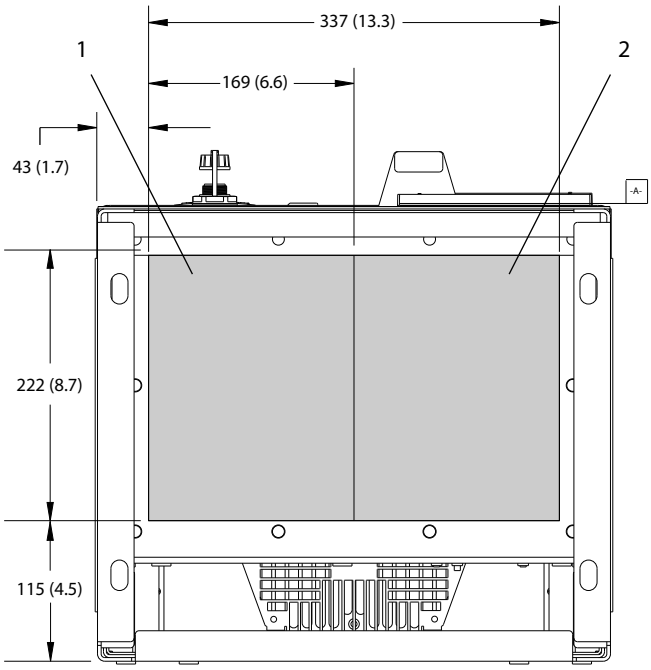

1	Mains side	2	Motor side

Illustration 8.53 Gland Plate Dimensions for D7h

 Danfoss A/S © 01/2018 All rights reserved.

8.7.2 D7h Terminal Dimensions

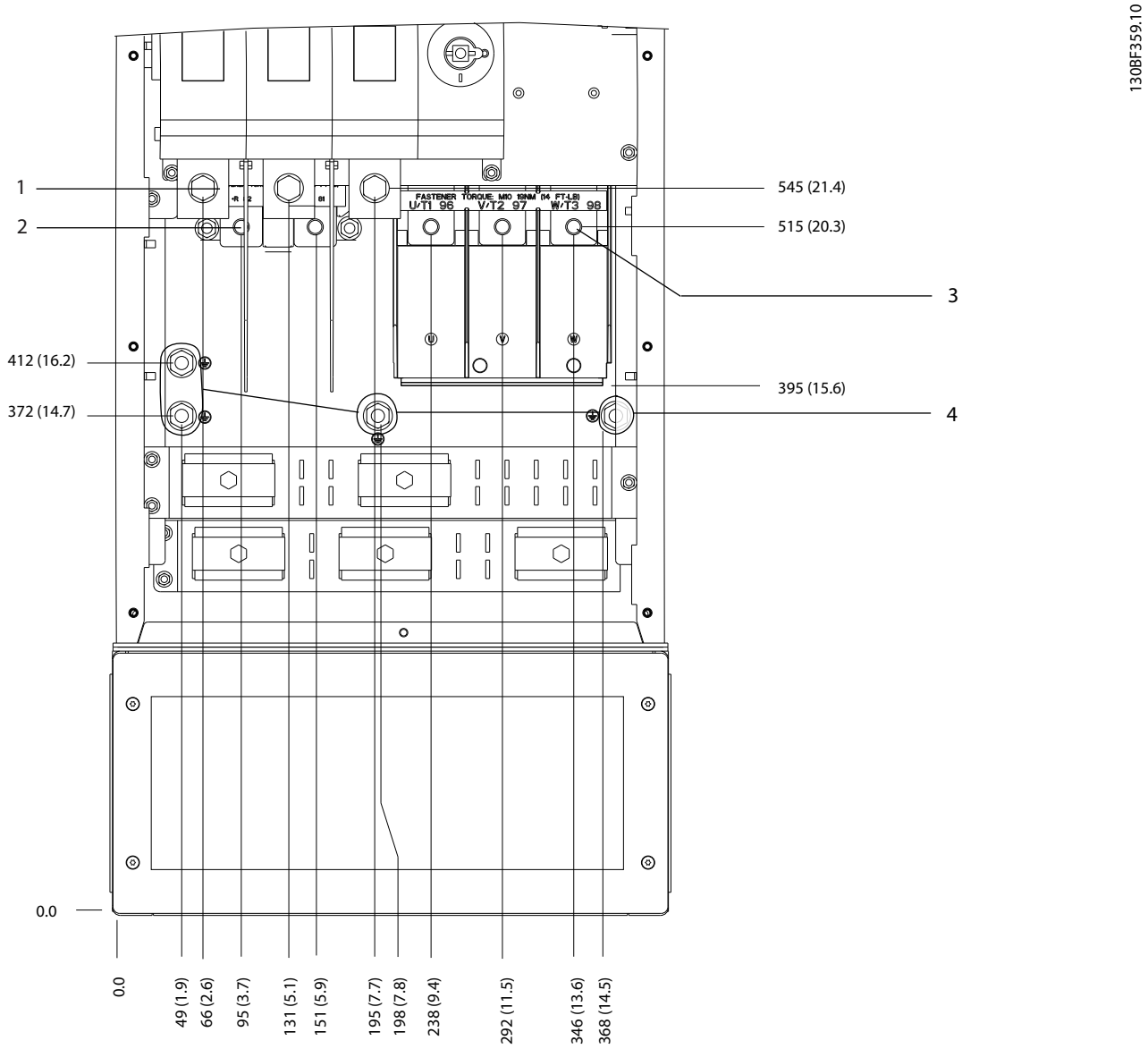

1	Mains terminals	3	Motor terminals
2	Brake terminals	4	Ground terminals

Illustration 8.54 D7h Terminal Dimensions with Disconnect Option (Front View)

 Danfoss A/S © 01/2018 All rights reserved.

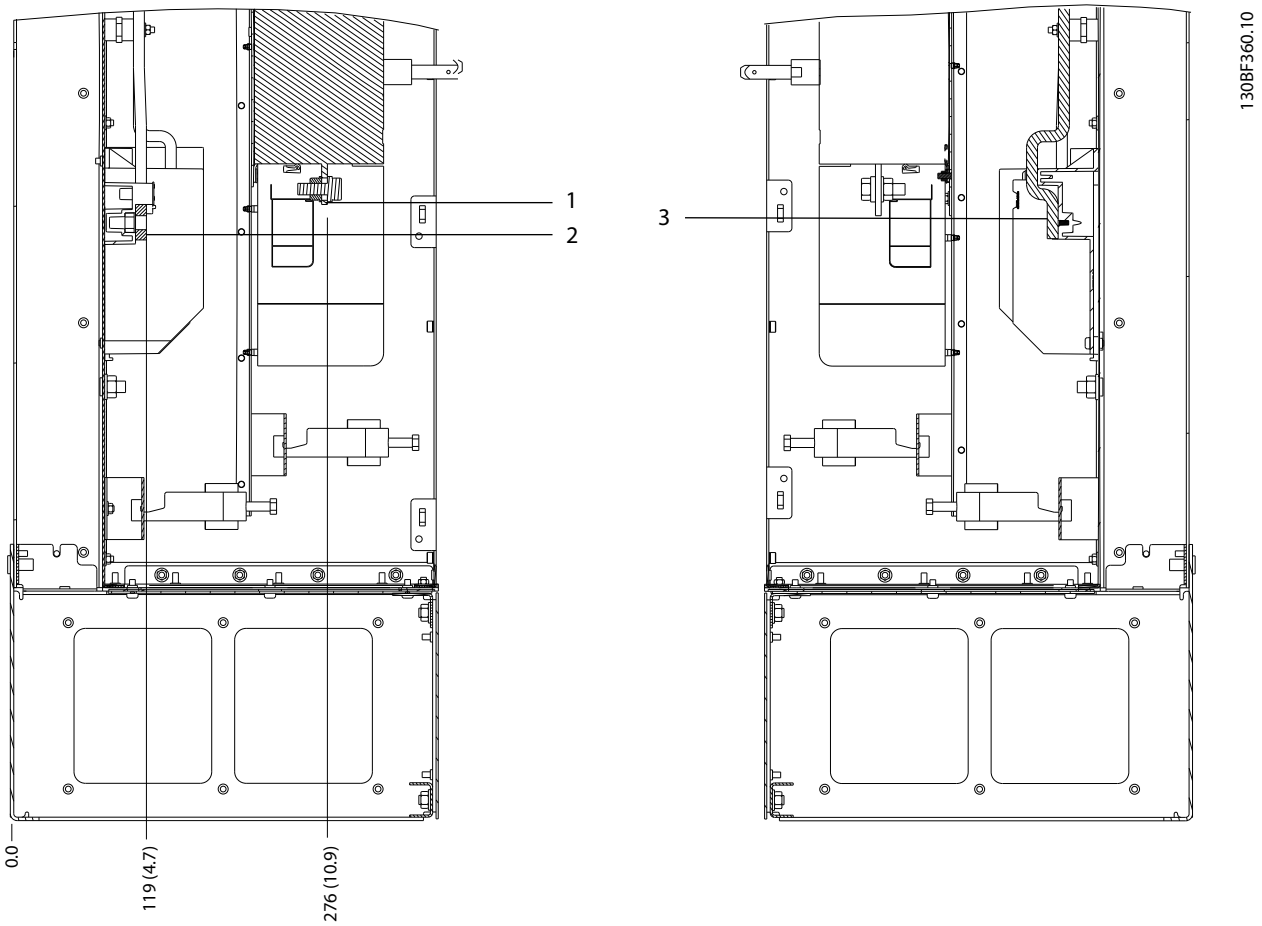

1	Mains terminals	3	Motor terminals
2	Brake terminals	–	–

Illustration 8.55 D7h Terminal Dimensions with Disconnect Option (Side Views)

Danfoss A/S © 01/2018 All rights reserved.

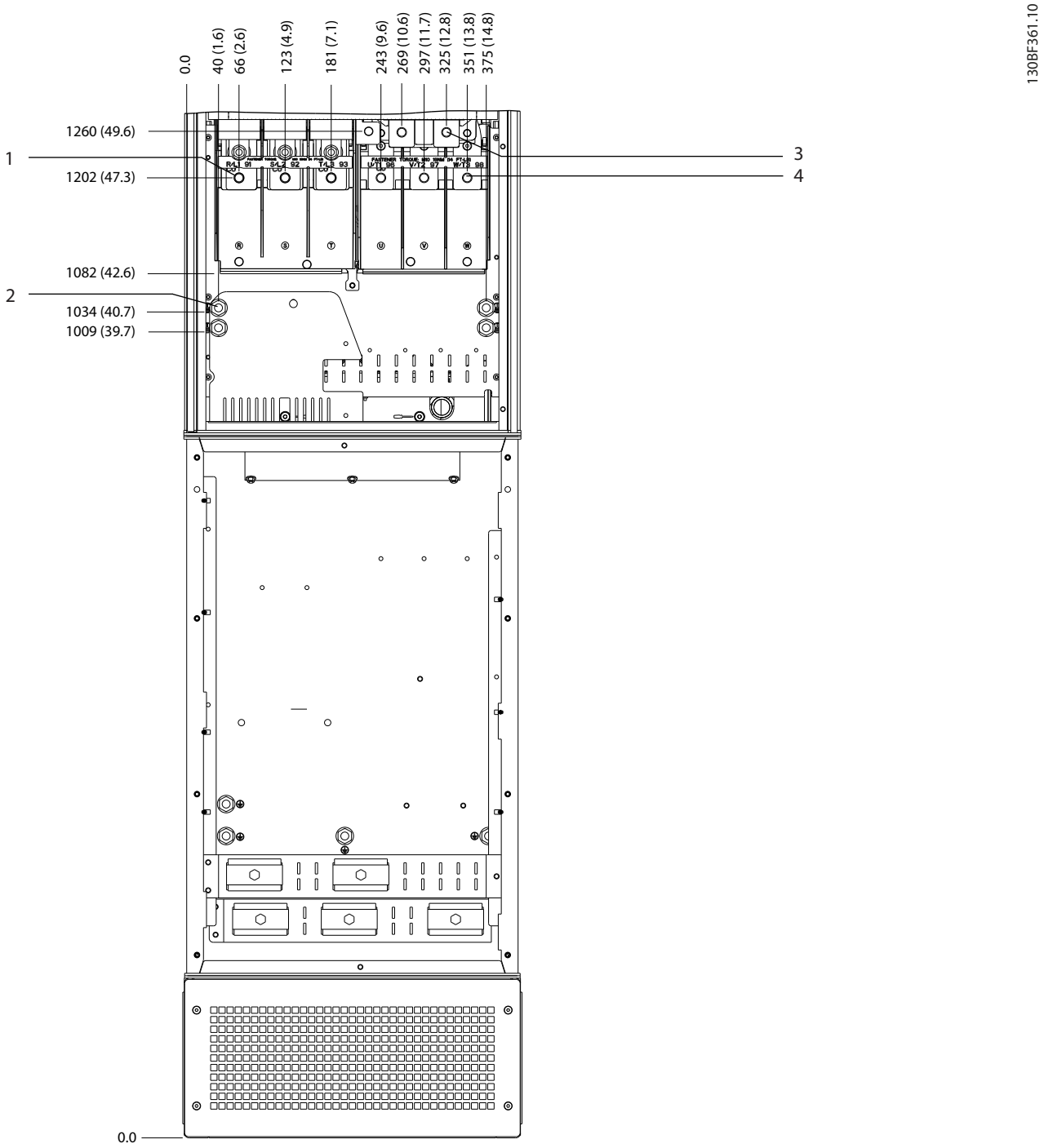

1	Mains terminals	3	Brake terminals
2	Ground terminals	4	Motor terminals

Illustration 8.56 D7h Terminal Dimensions with Brake Option (Front View)

 Danfoss A/S © 01/2018 All rights reserved.

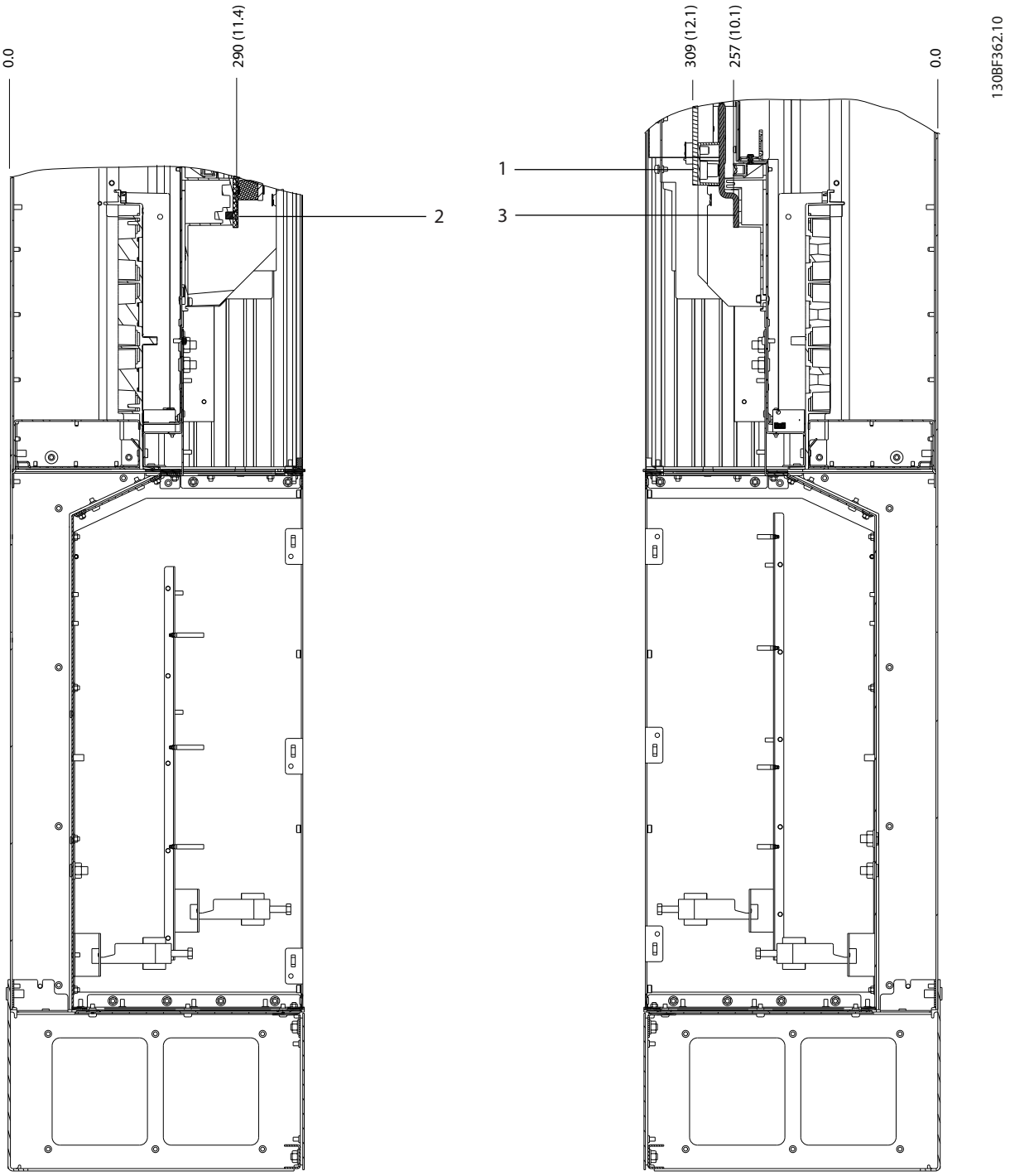

1	Brake terminals	3	Motor terminals
2	Mains terminals	–	–

Illustration 8.57 D7h Terminal Dimensions with Brake Option (Side Views)

 Danfoss A/S © 01/2018 All rights reserved.

8.8 D8h Exterior and Terminal Dimensions

8.8.1 D8h Exterior Dimensions

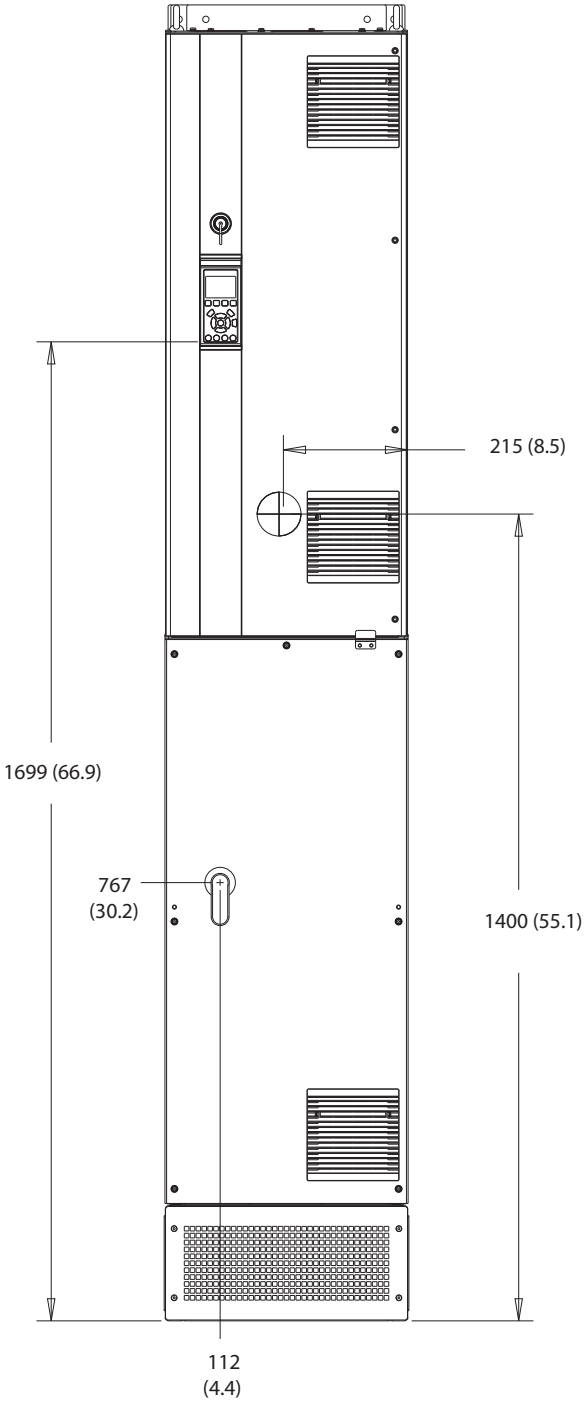

Illustration 8.58 Front View of D8h

 Danfoss A/S © 01/2018 All rights reserved.

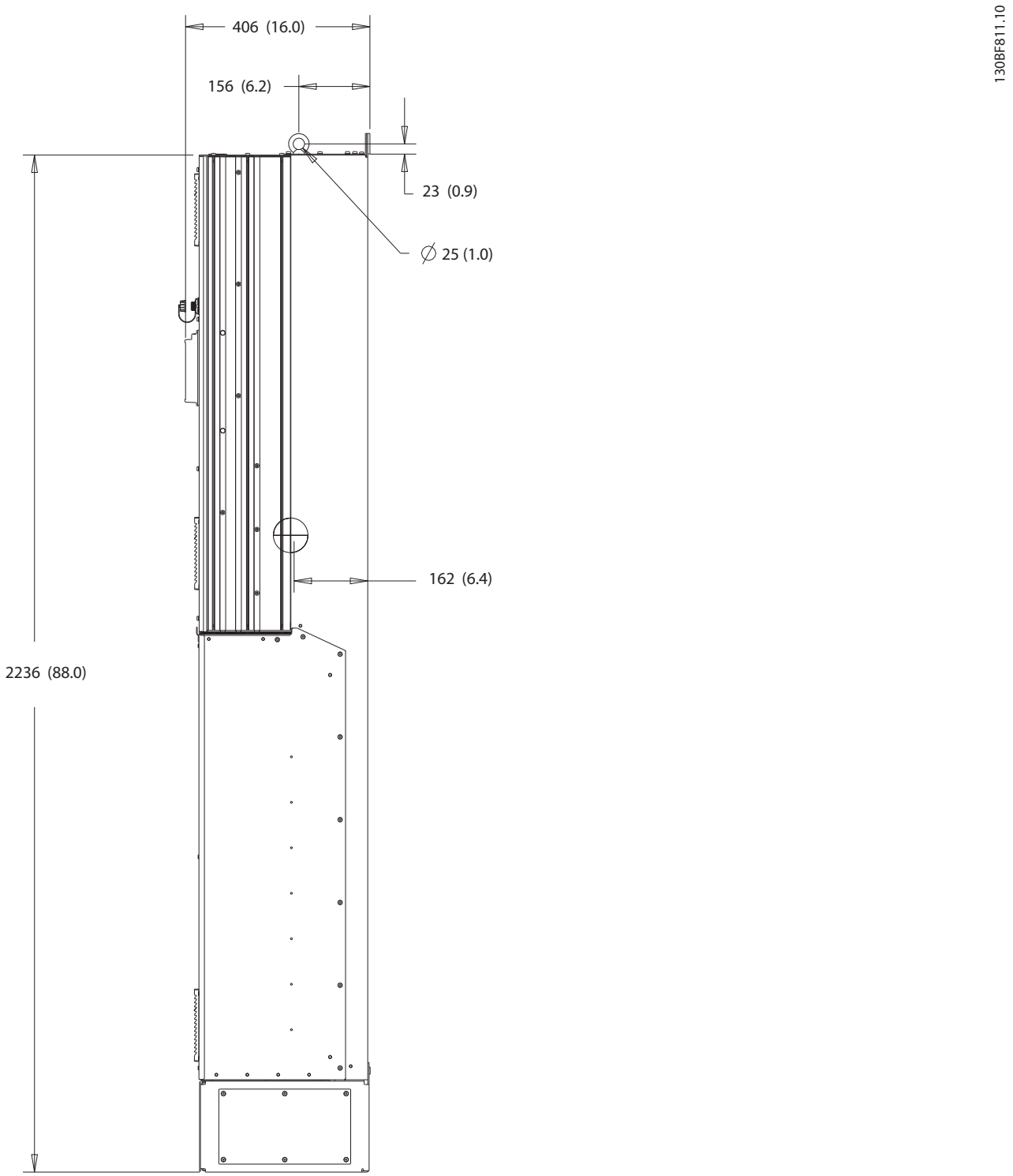

Illustration 8.59 Side View of D8h

 Danfoss A/S © 01/2018 All rights reserved.

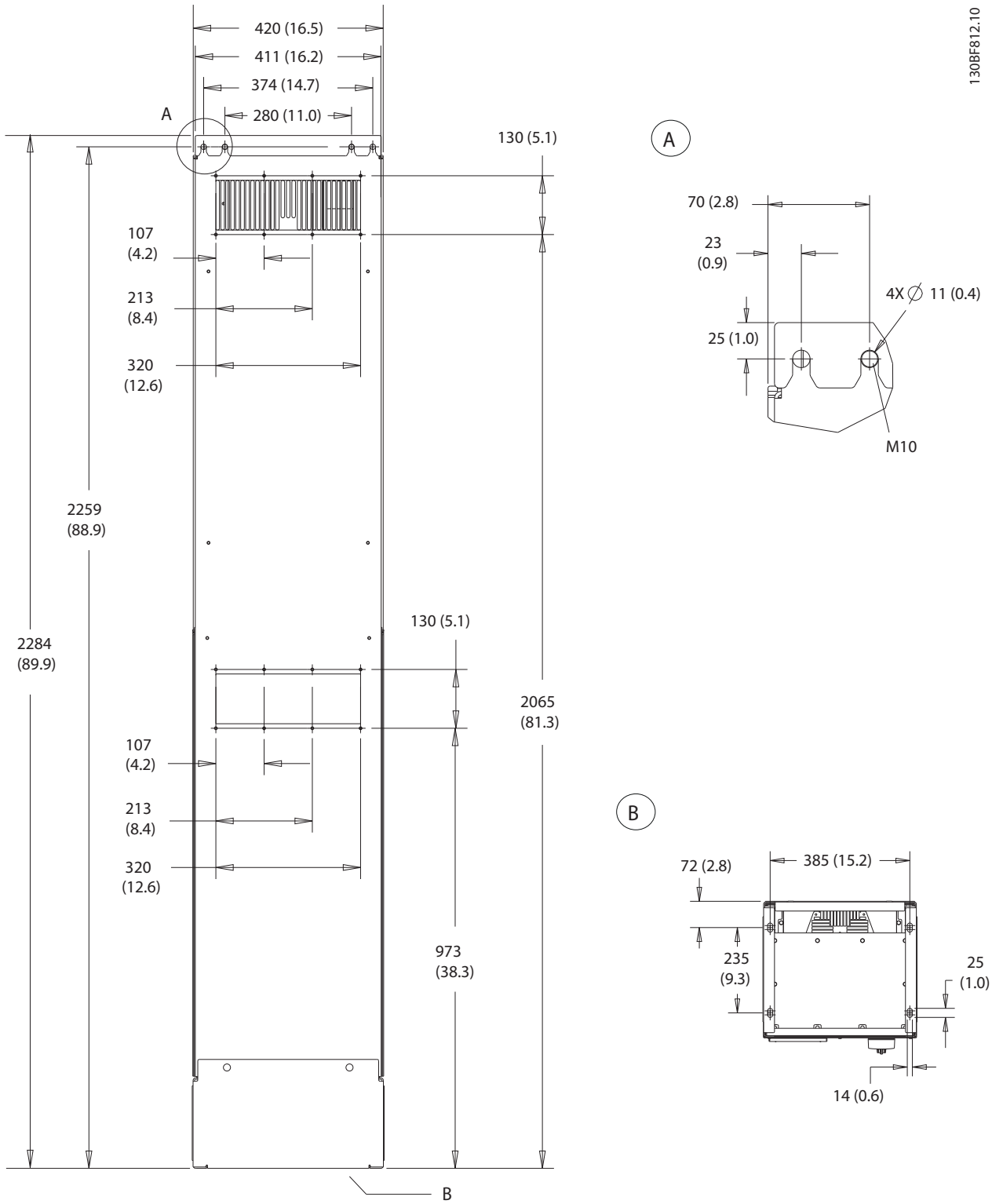

Illustration 8.60 Back View of D8h

 Danfoss A/S © 01/2018 All rights reserved.

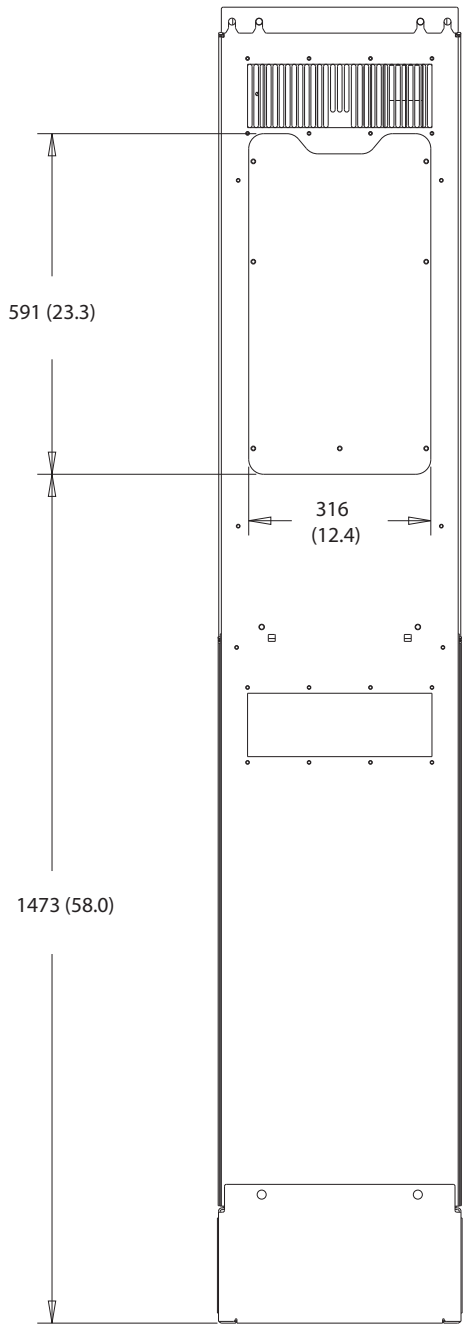

Illustration 8.61 Heat Sink Access Dimensions for D8h

 Danfoss A/S © 01/2018 All rights reserved.

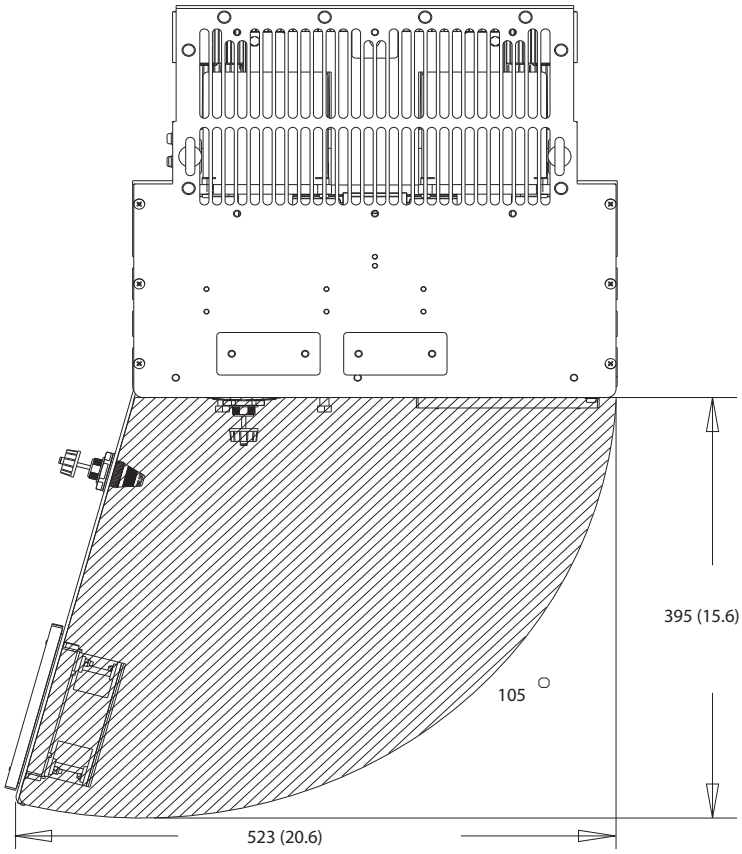

Illustration 8.62 Door Clearance for D8h

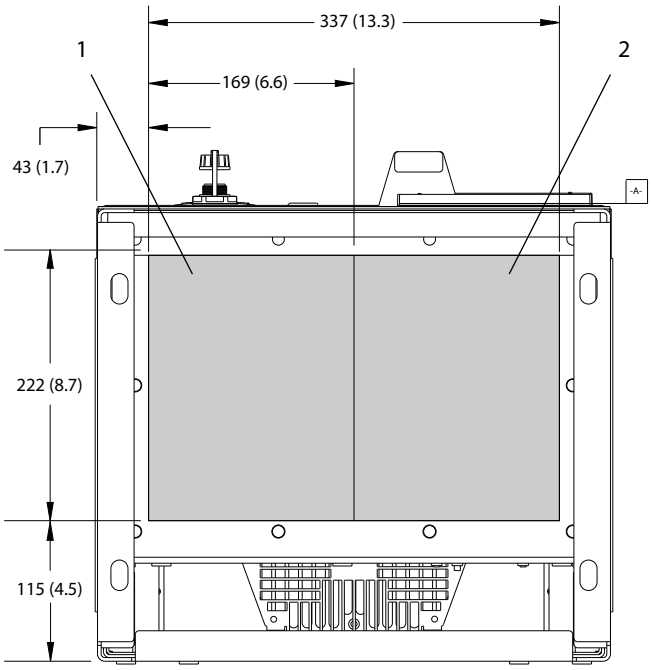

1	Mains side	2	Motor side

Illustration 8.63 Gland Plate Dimensions for D8h

 Danfoss A/S © 01/2018 All rights reserved.

8.8.2 D8h Terminal Dimensions

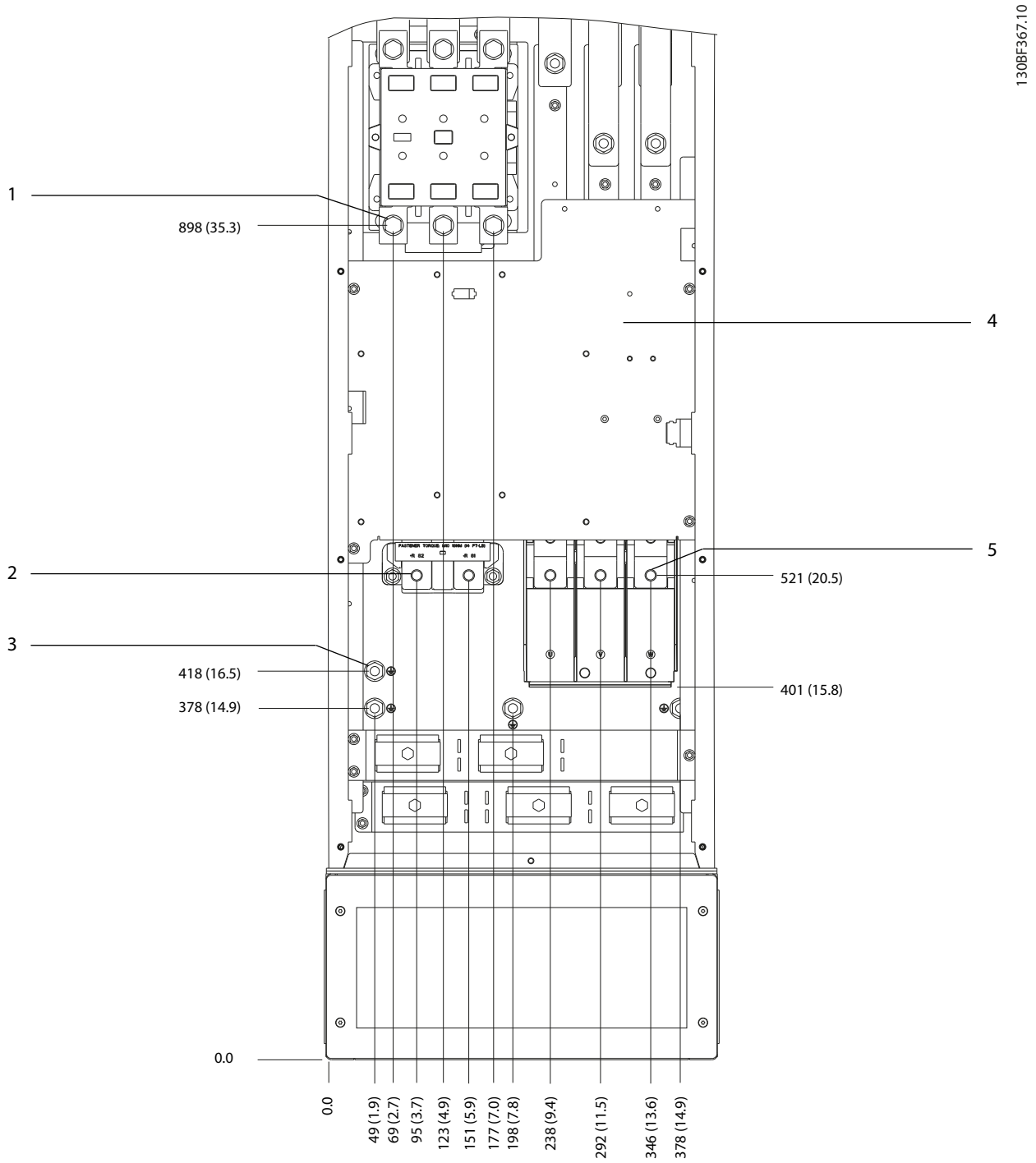

1	Mains terminals	4	TB6 terminal block for contactor
2	Brake terminals	5	Motor terminals
3	Ground terminals	–	–

Illustration 8.64 D8h Terminal Dimensions with Contactor Option (Front View)

 Danfoss A/S © 01/2018 All rights reserved.

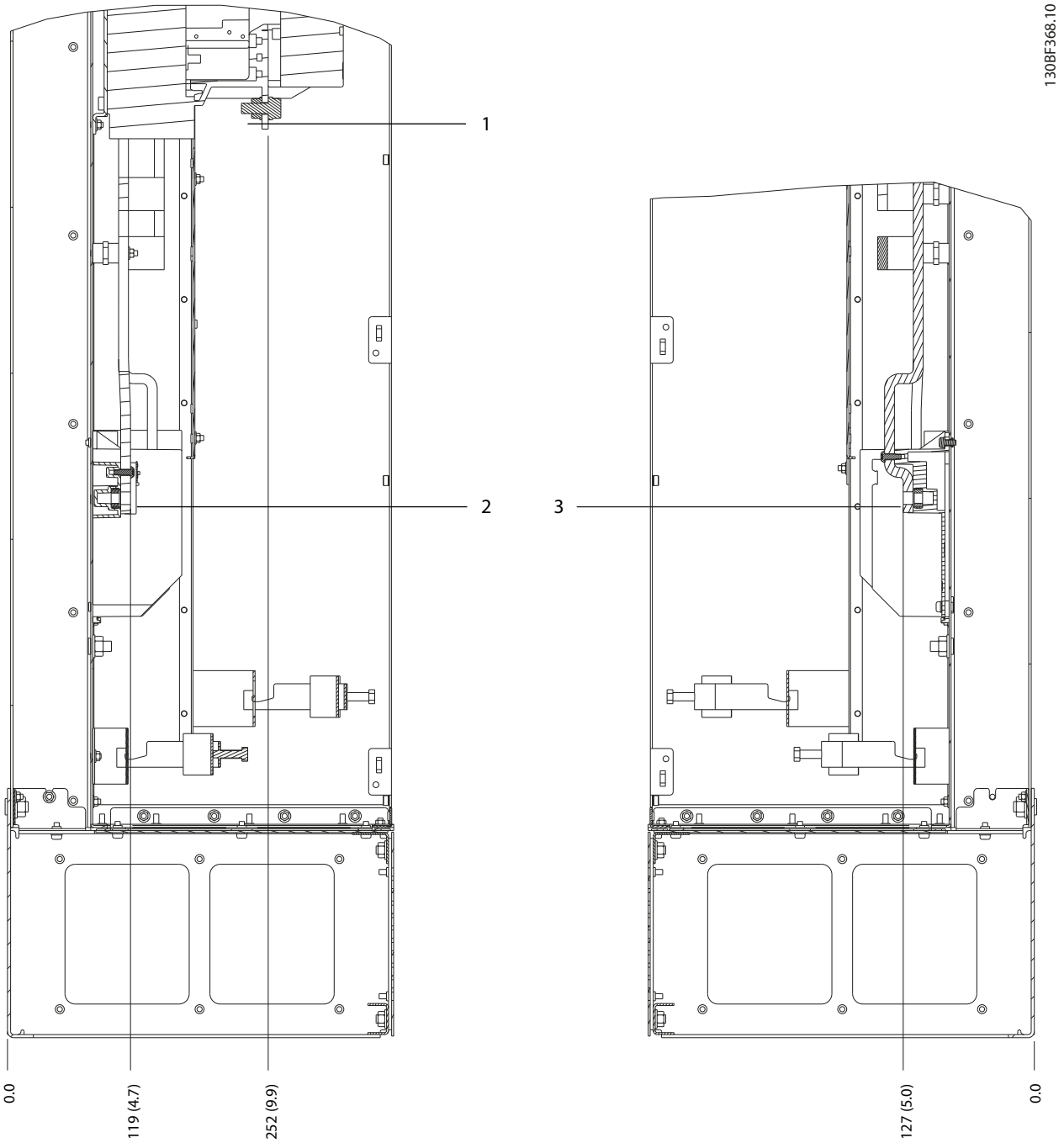

1	Mains terminals	3	Motor terminals
2	Brake terminals	–	–

Illustration 8.65 D8h Terminal Dimensions with Contactor Option (Side Views)

 Danfoss A/S © 01/2018 All rights reserved.

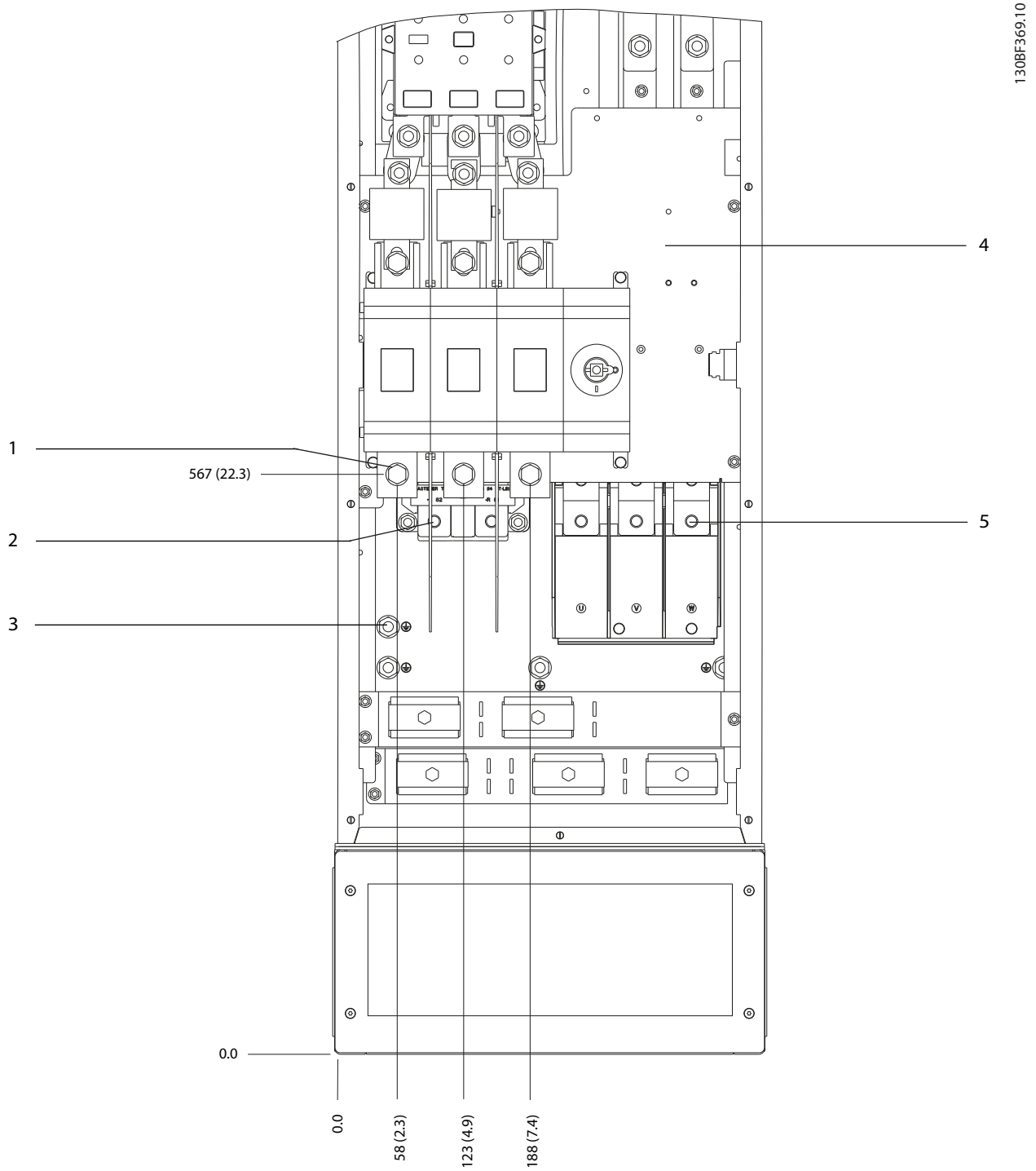

1	Mains terminals	4	TB6 terminal block for contactor
2	Brake terminals	5	Motor terminals
3	Ground terminals	–	–

Illustration 8.66 D8h Terminal Dimensions with Contactor and Disconnect Options (Front View)

 Danfoss A/S © 01/2018 All rights reserved.

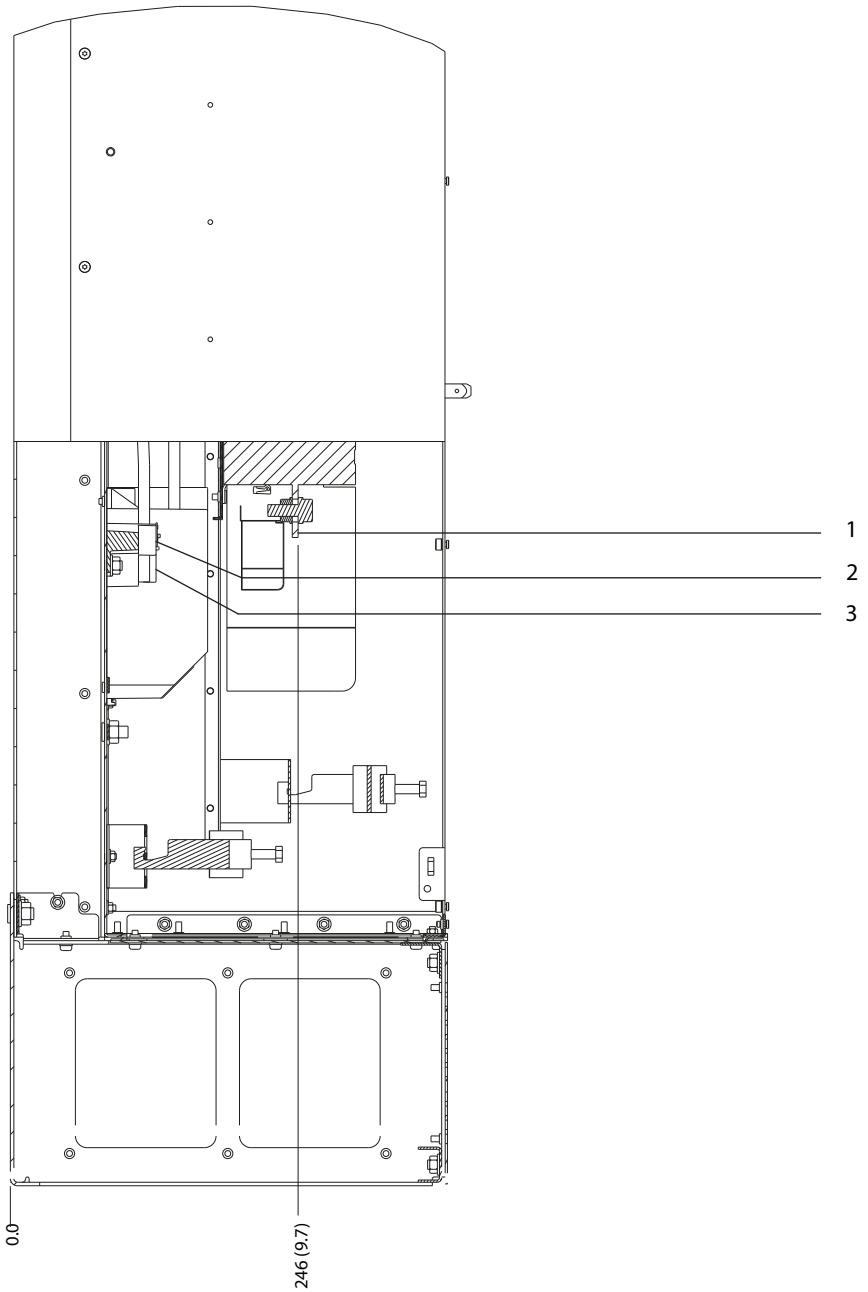

1	Mains terminals	3	Motor terminals
2	Brake terminals	–	–

Illustration 8.67 D8h Terminal Dimensions with Contactor and Disconnect Options (Side View)

 Danfoss A/S © 01/2018 All rights reserved.

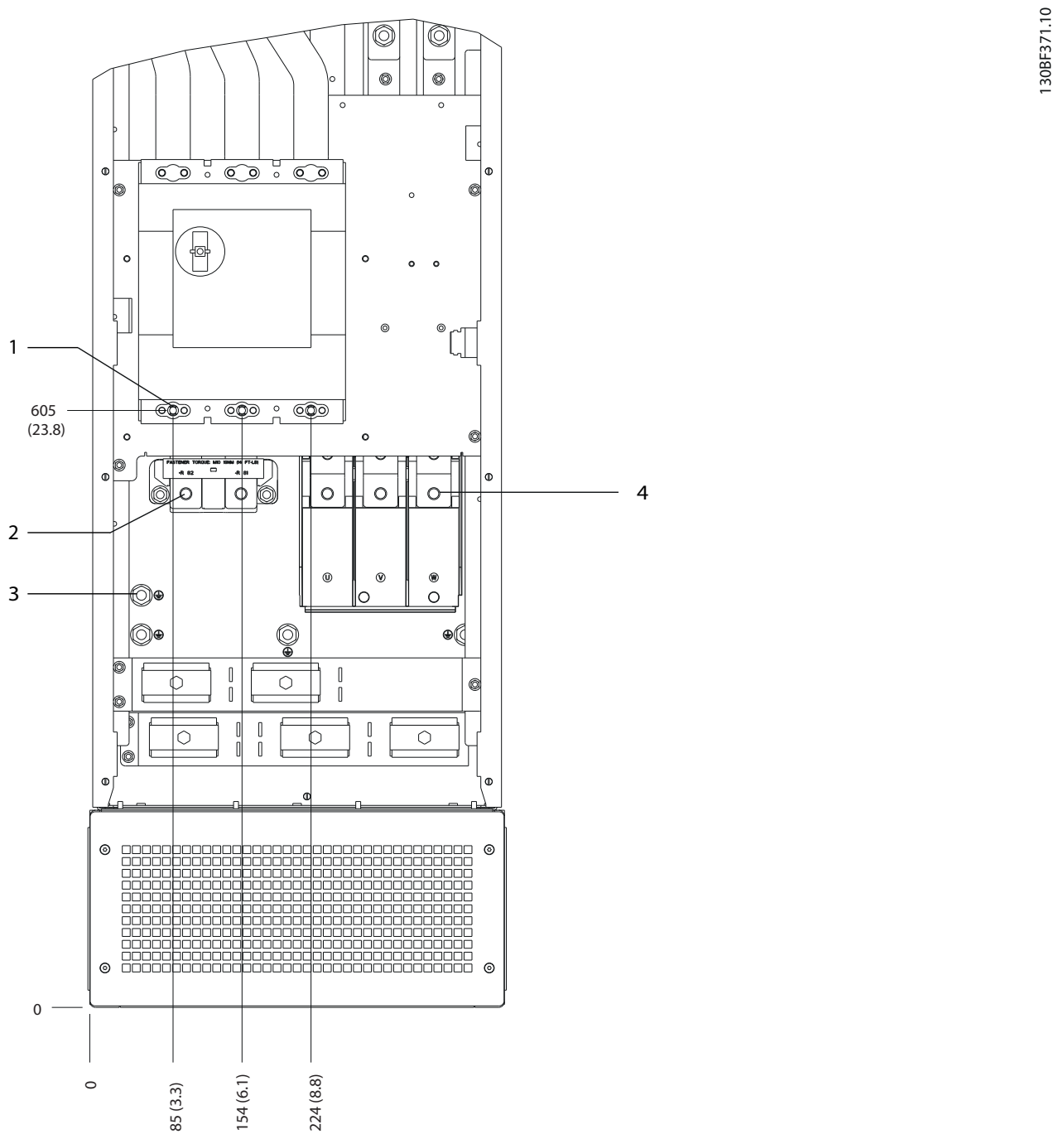

1	Mains terminals	3	Ground terminals
2	Brake terminals	4	Motor terminals

Illustration 8.68 D8h Terminal Dimensions with Circuit Breaker Option (Front View)

Danfoss A/S © 01/2018 All rights reserved.

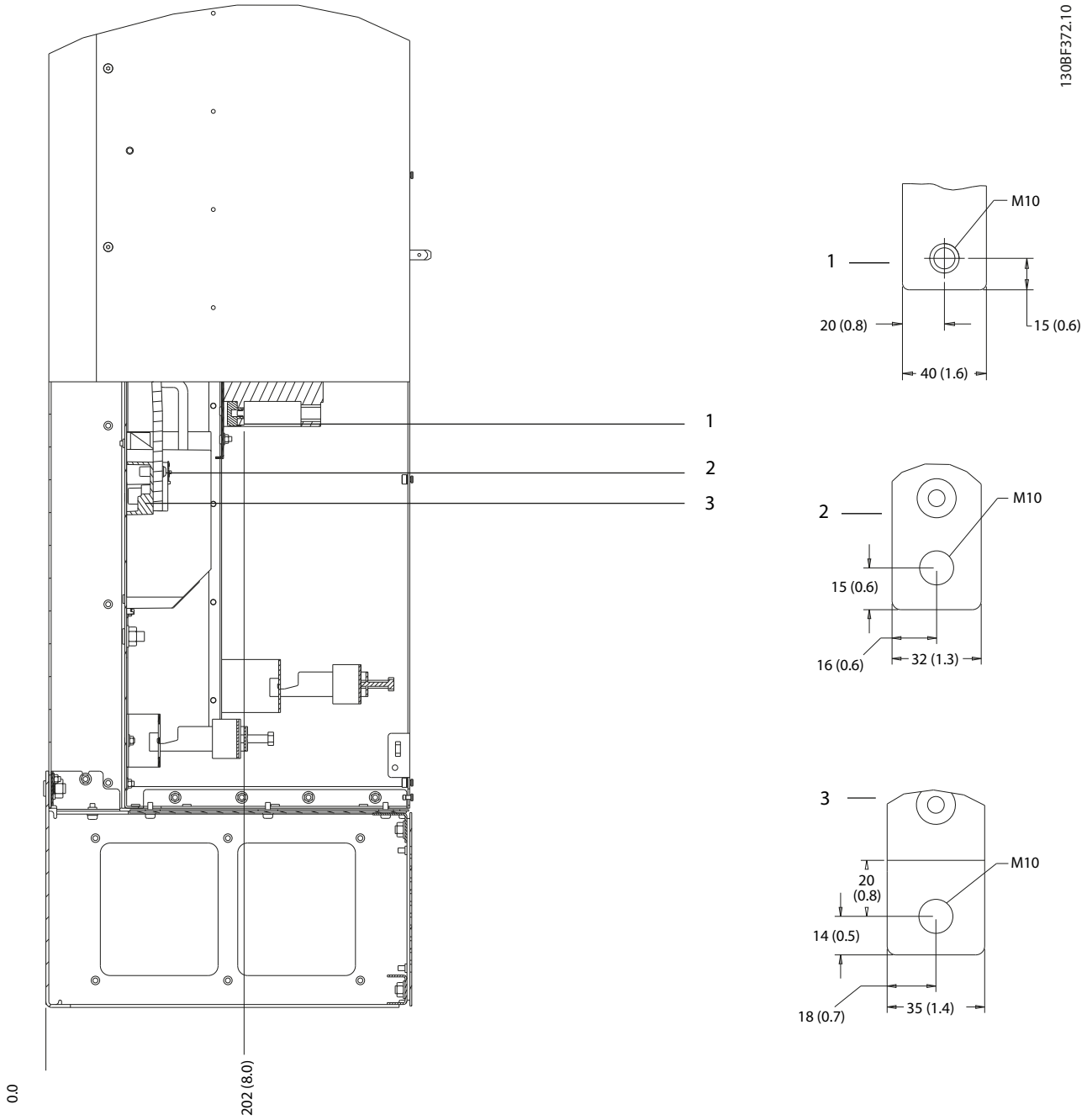

1	Mains terminals	3	Motor terminals
2	Brake terminals	–	–

Illustration 8.69 D8h Terminal Dimensions with Circuit Breaker Option (Side View)

 Danfoss A/S © 01/2018 All rights reserved.

8.9 E1h Exterior and Terminal Dimensions

8.9.1 E1h Exterior Dimensions

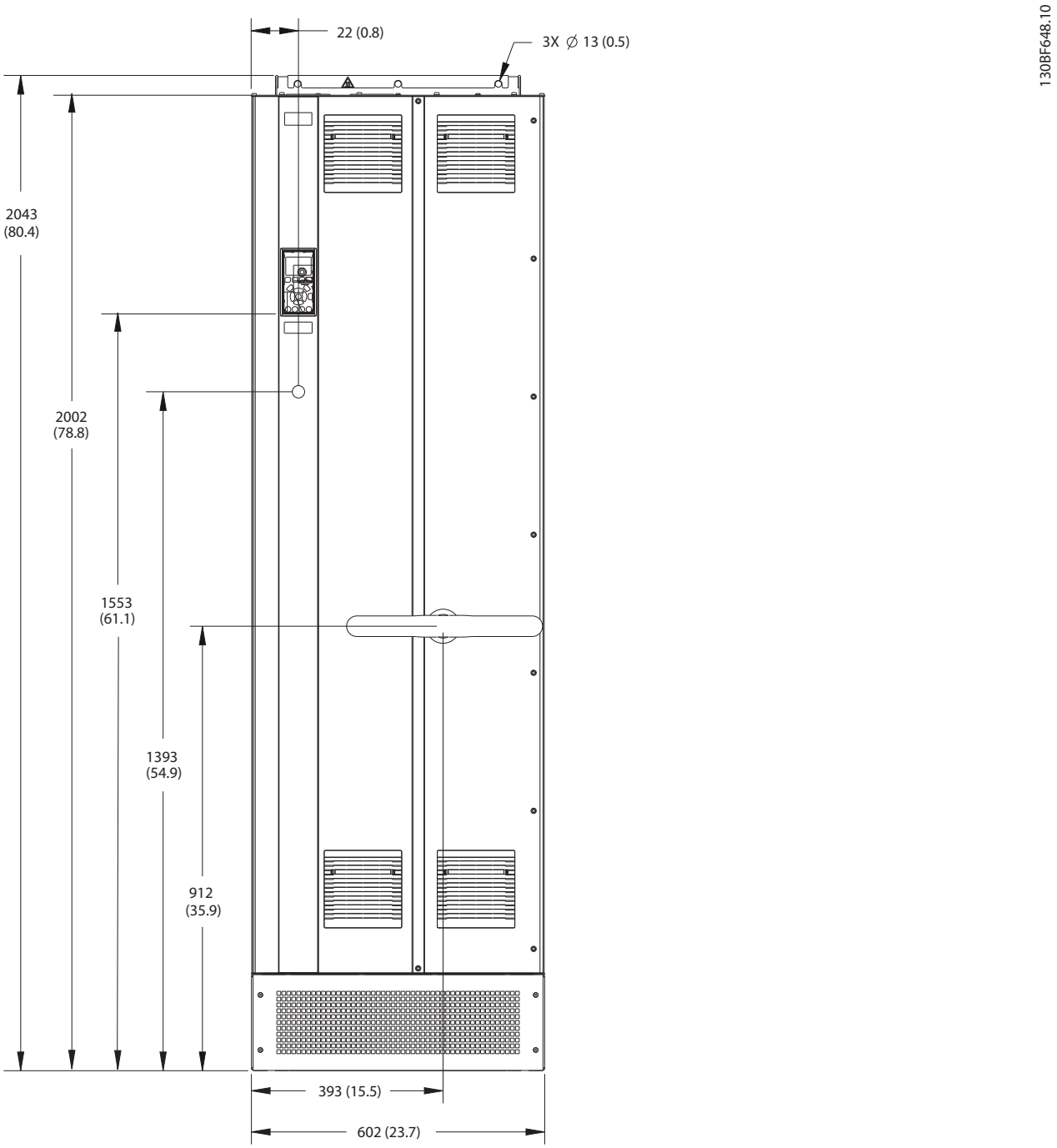

Illustration 8.70 Front View of E1h

 Danfoss A/S © 01/2018 All rights reserved.

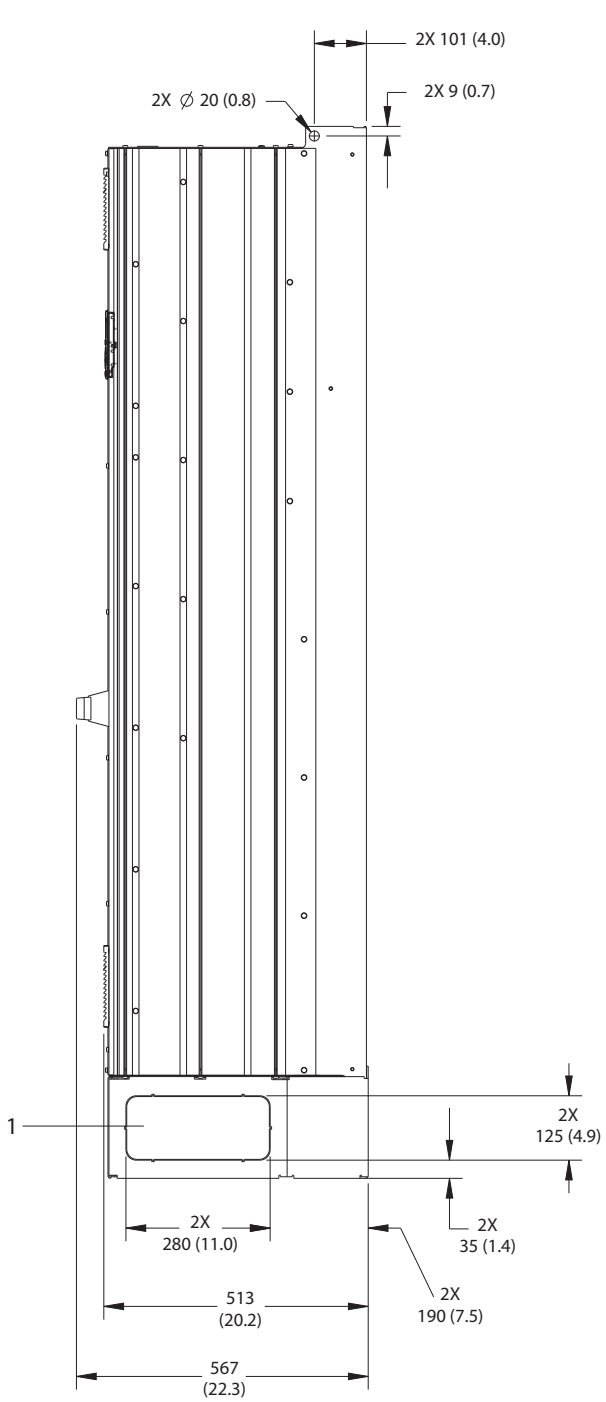

1	Knockout panel

Illustration 8.71 Side View of E1h

 Danfoss A/S © 01/2018 All rights reserved.

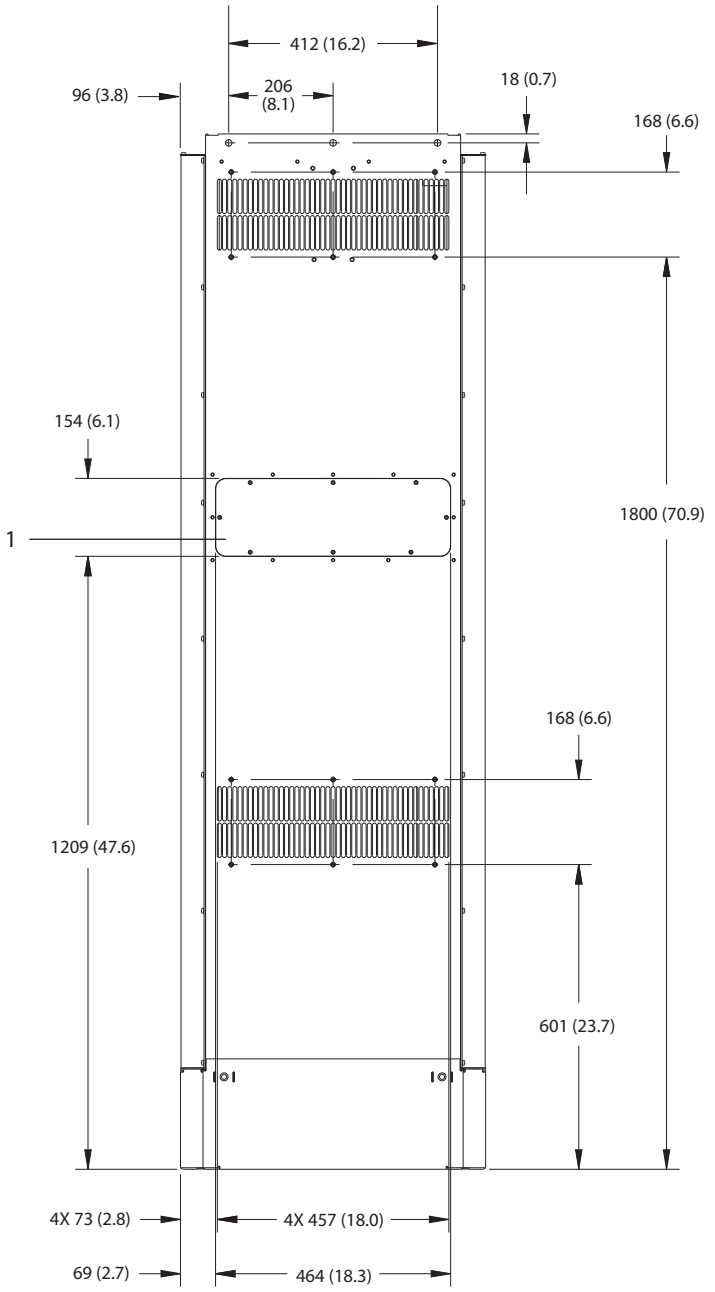

1	Heat sink access panel (optional)

Illustration 8.72 Back View of E1h

Danfoss A/S © 01/2018 All rights reserved.

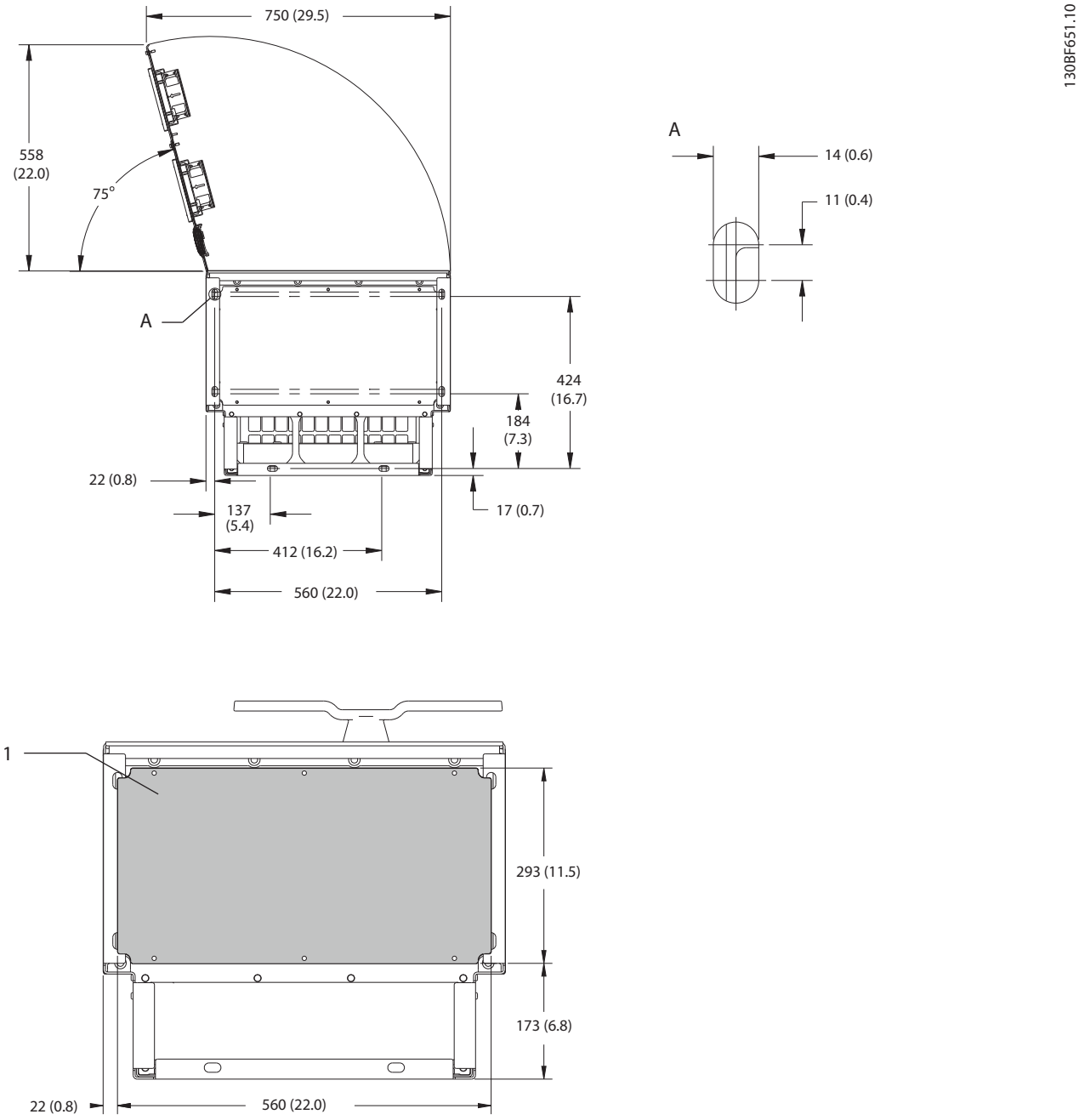

1	Gland plate

Illustration 8.73 Door Clearance and Gland Plate Dimensions for E1h

 Danfoss A/S © 01/2018 All rights reserved.

8.9.2 E1h Terminal Dimensions

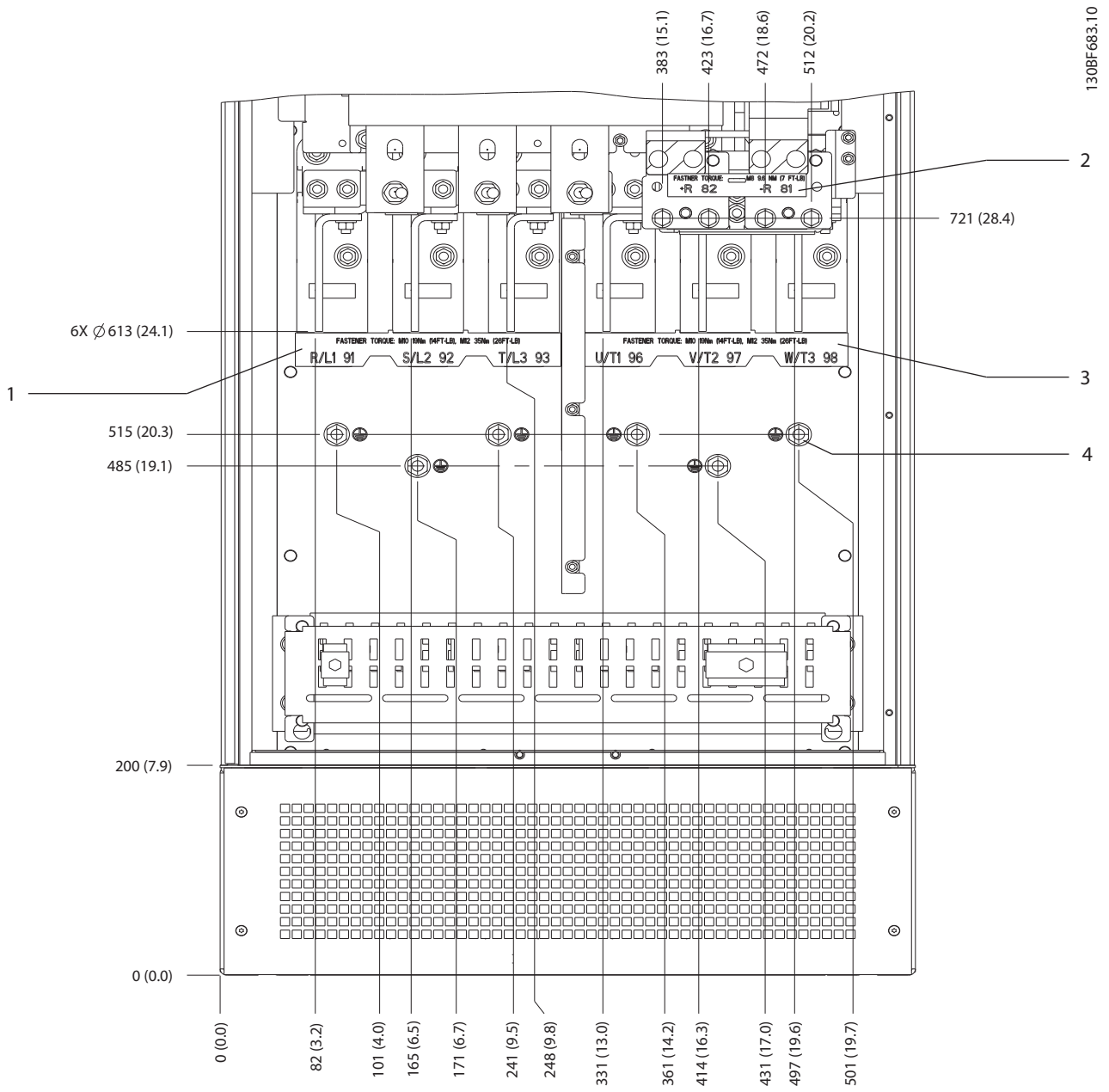

1	Mains terminals	3	Motor terminals
2	Brake or regen terminals	4	Ground terminals, M10 nut

Illustration 8.74 E1h Terminal Dimensions (Front View)

 Danfoss A/S © 01/2018 All rights reserved.

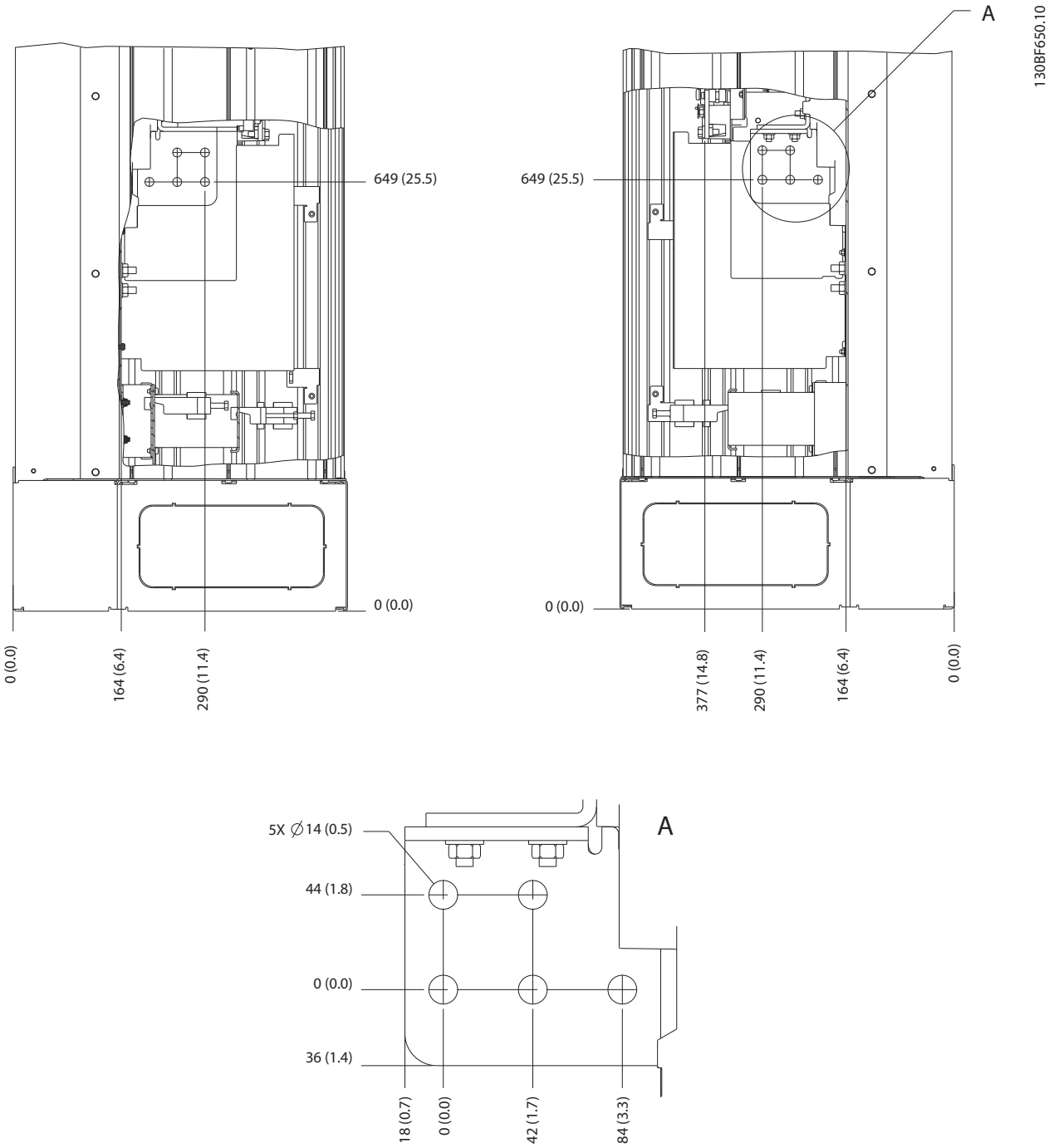

Illustration 8.75 E1h Terminal Dimensions (Side Views)

 Danfoss A/S © 01/2018 All rights reserved.

8.10 E2h Exterior and Terminal Dimensions

8.10.1 E2h Exterior Dimensions

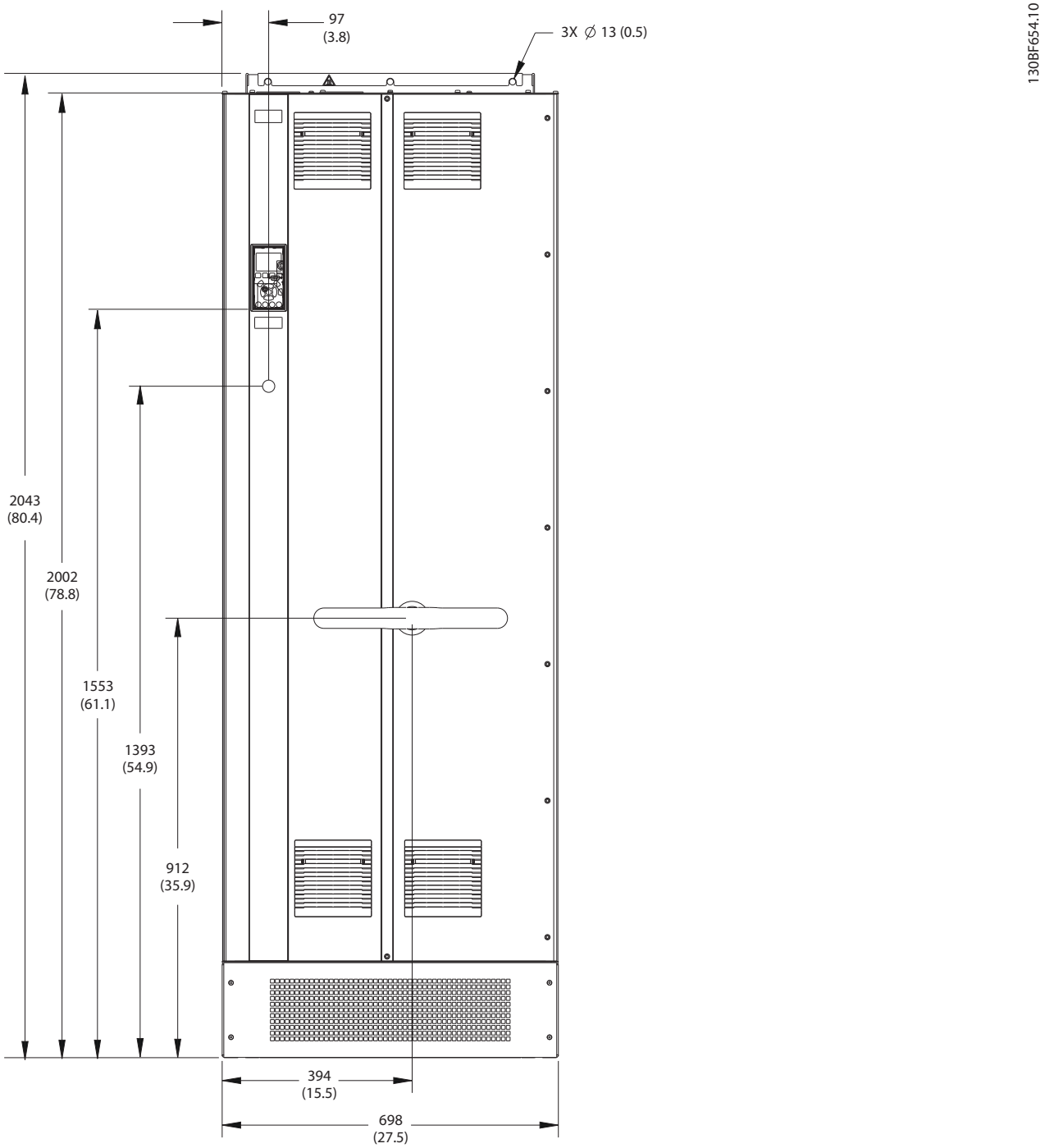

Illustration 8.76 Front View of E2h

 Danfoss A/S © 01/2018 All rights reserved.

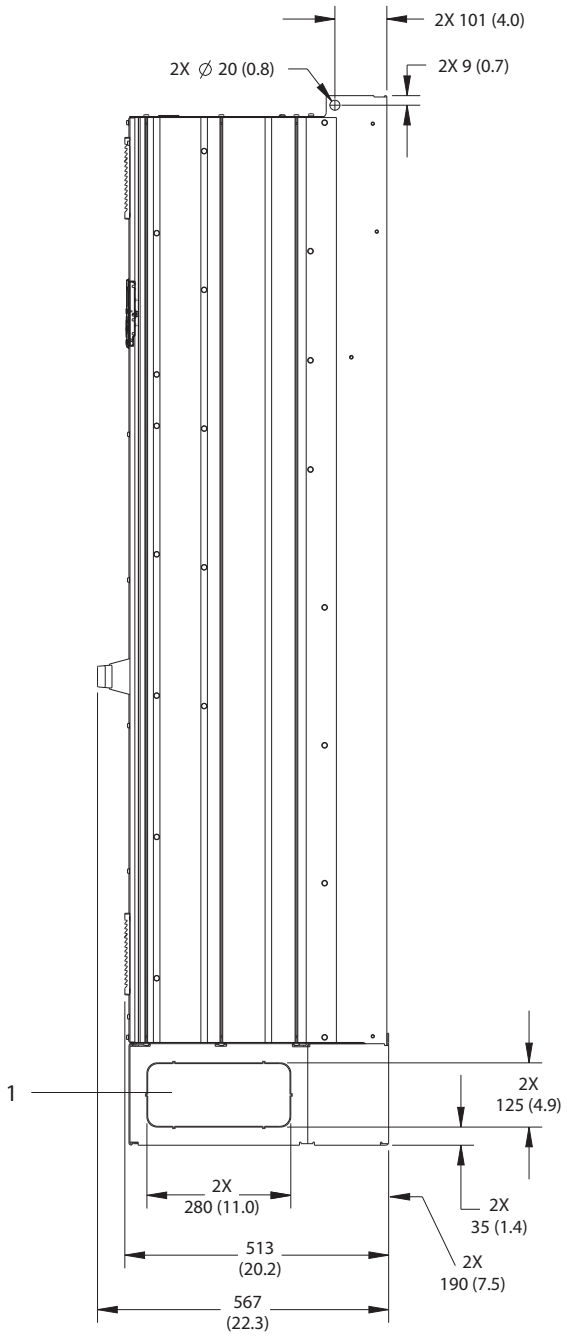

1	Knockout panel

Illustration 8.77 Side View of E2h

 Danfoss A/S © 01/2018 All rights reserved.

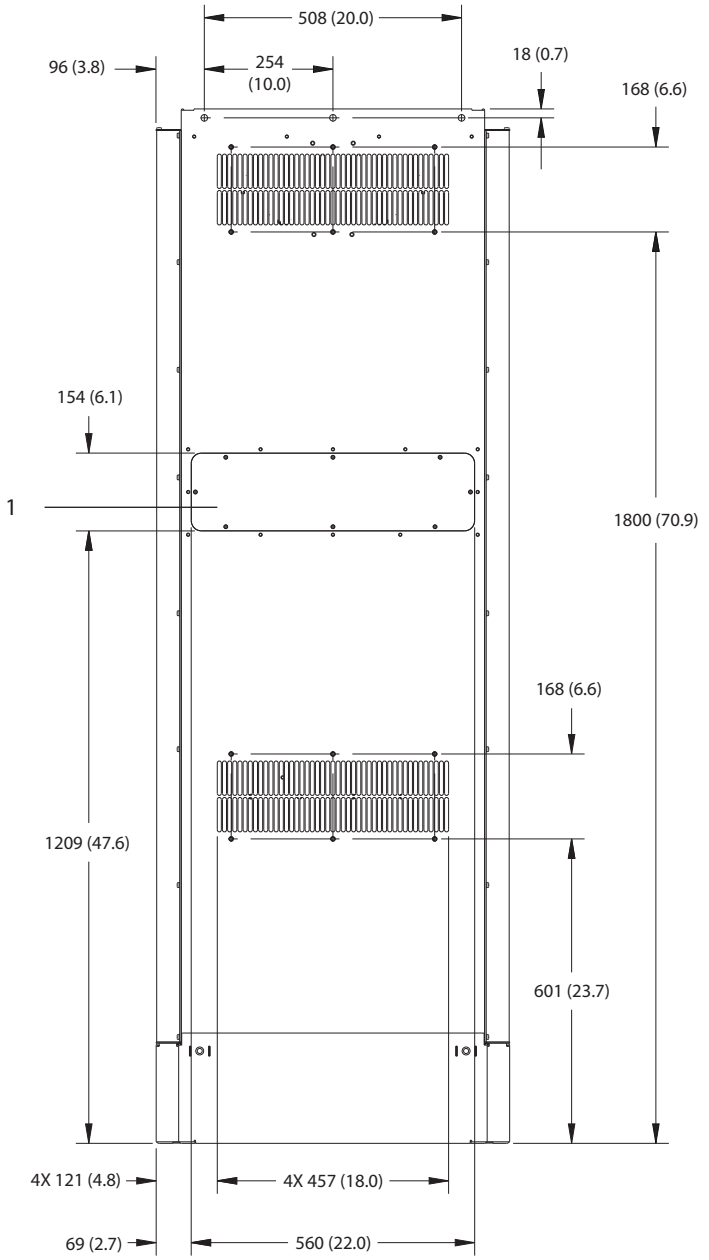

1	Heat sink access panel (optional)

Illustration 8.78 Back View of E2h

 Danfoss A/S © 01/2018 All rights reserved.

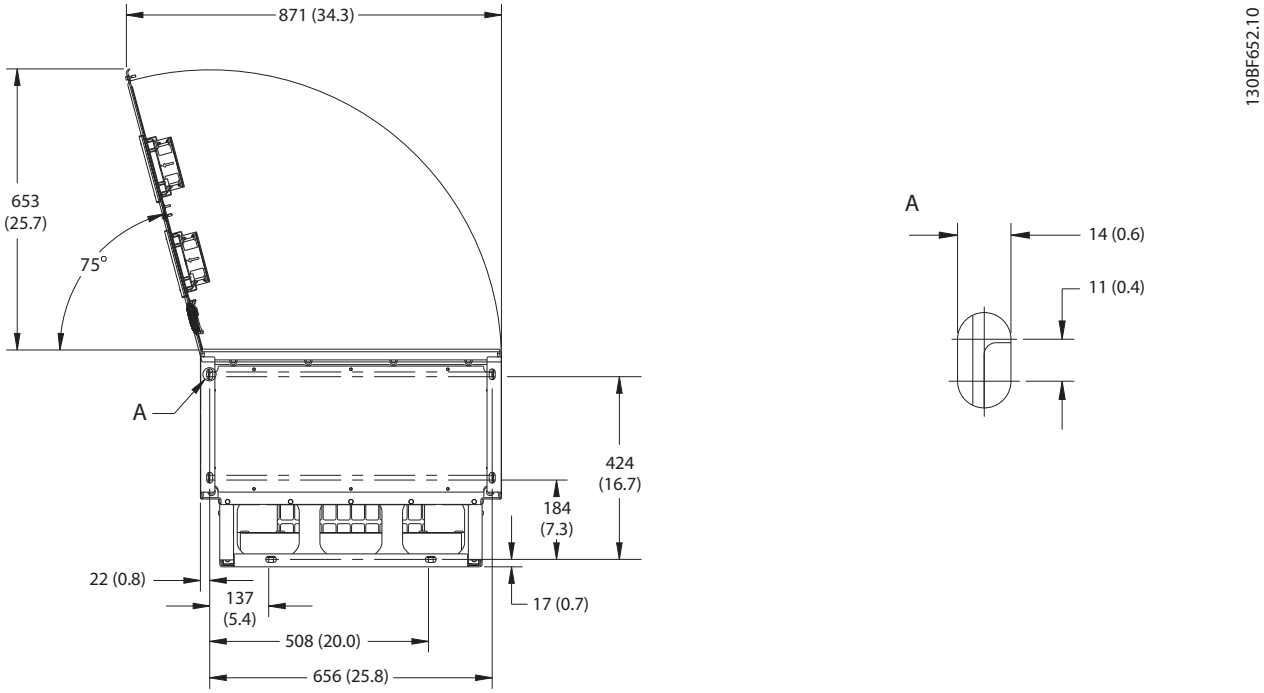

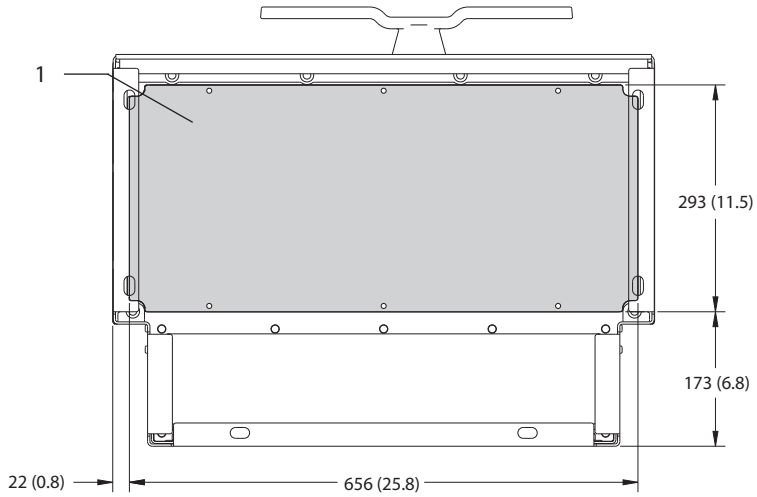

1	Gland plate

Illustration 8.79 Door Clearance and Gland Plate Dimensions for E2h

 Danfoss A/S © 01/2018 All rights reserved.

8.10.2 E2h Terminal Dimensions

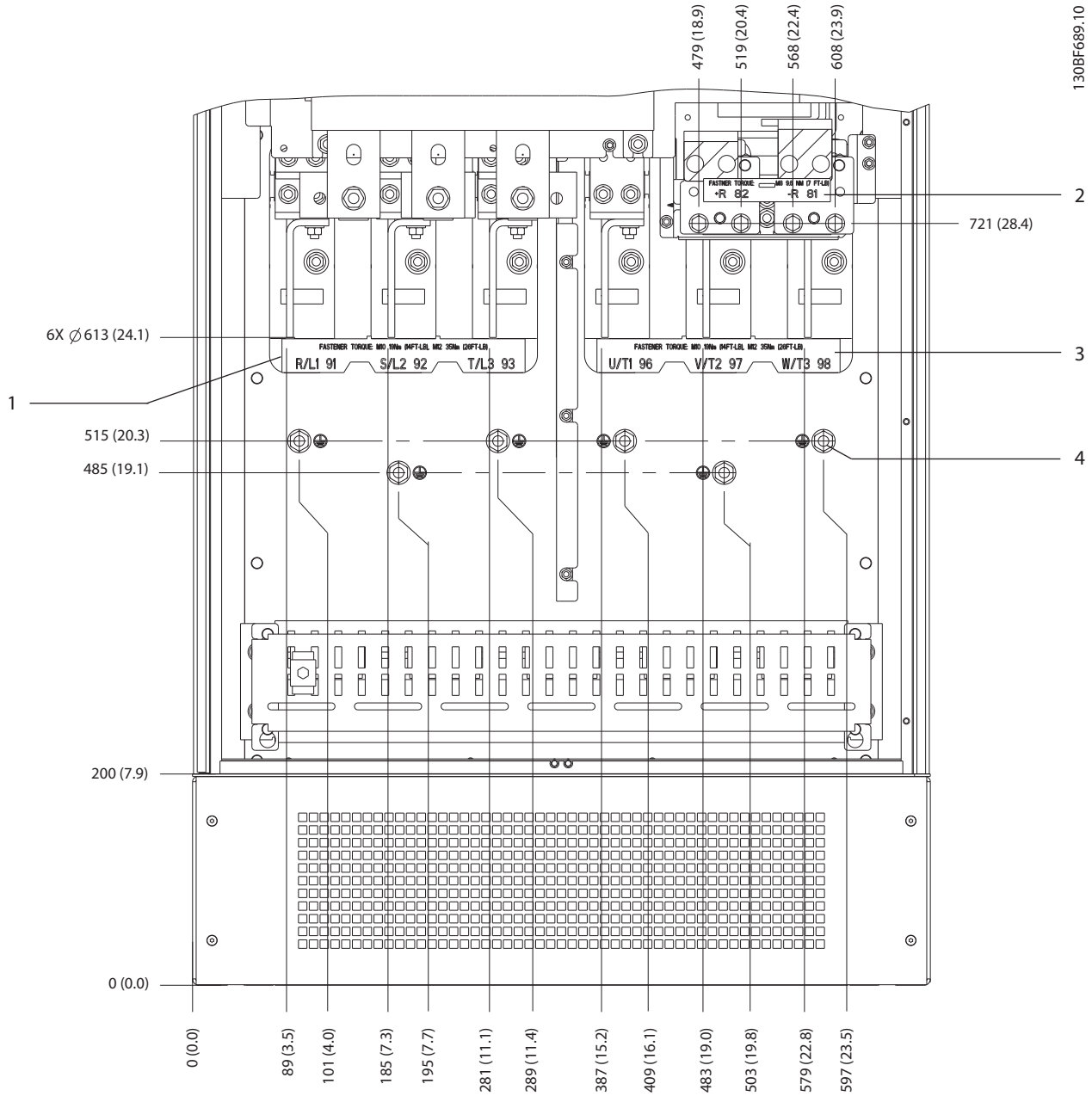

1	Mains terminals	3	Motor terminals
2	Brake or regen terminals	4	Ground terminals, M10 nut

Illustration 8.80 E2h Terminal Dimensions (Front View)

 Danfoss A/S © 01/2018 All rights reserved.

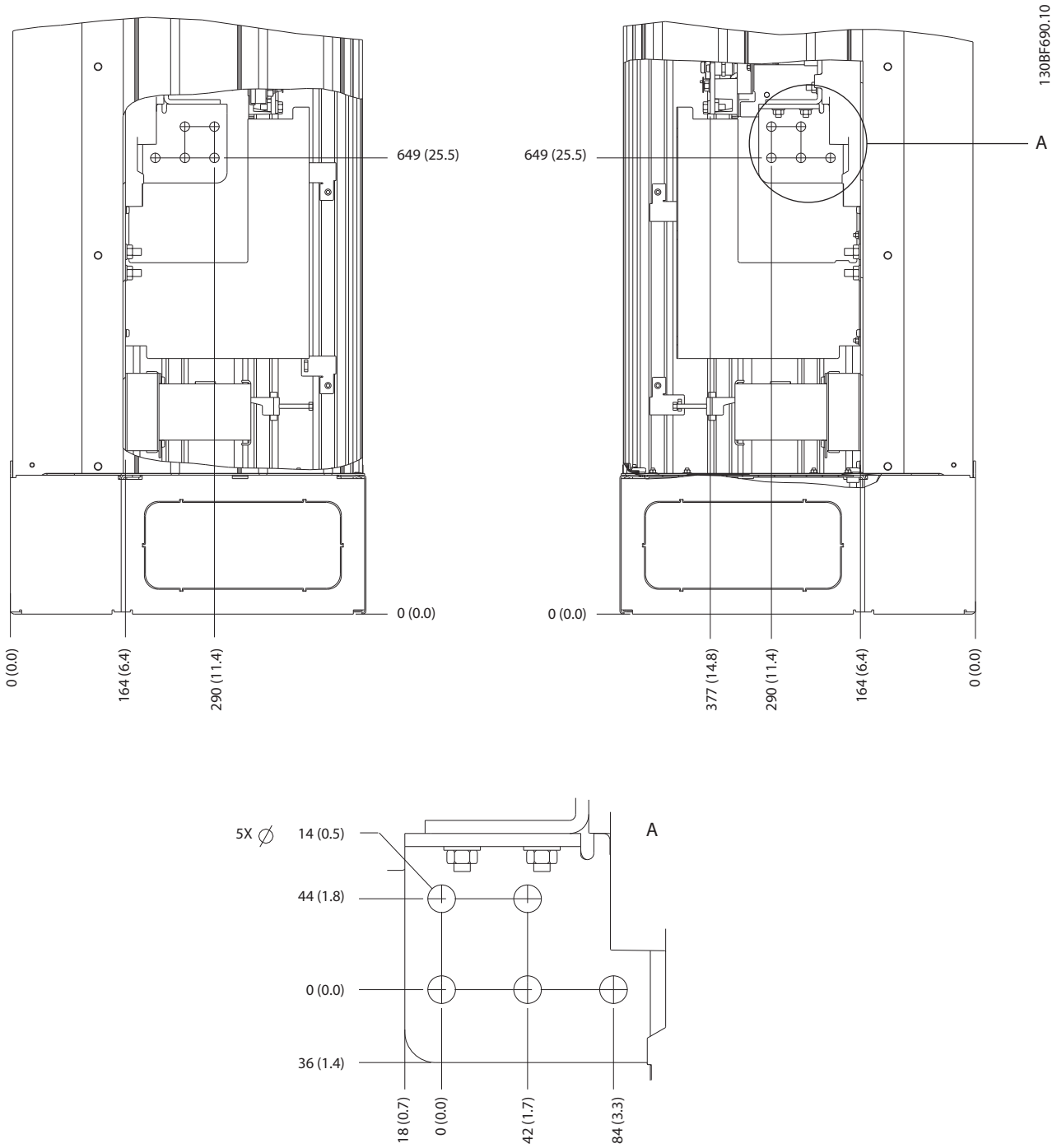

Illustration 8.81 E2h Terminal Dimensions (Side Views)

 Danfoss A/S © 01/2018 All rights reserved.

8.11 E3h Exterior and Terminal Dimensions

8.11.1 E3h Exterior Dimensions

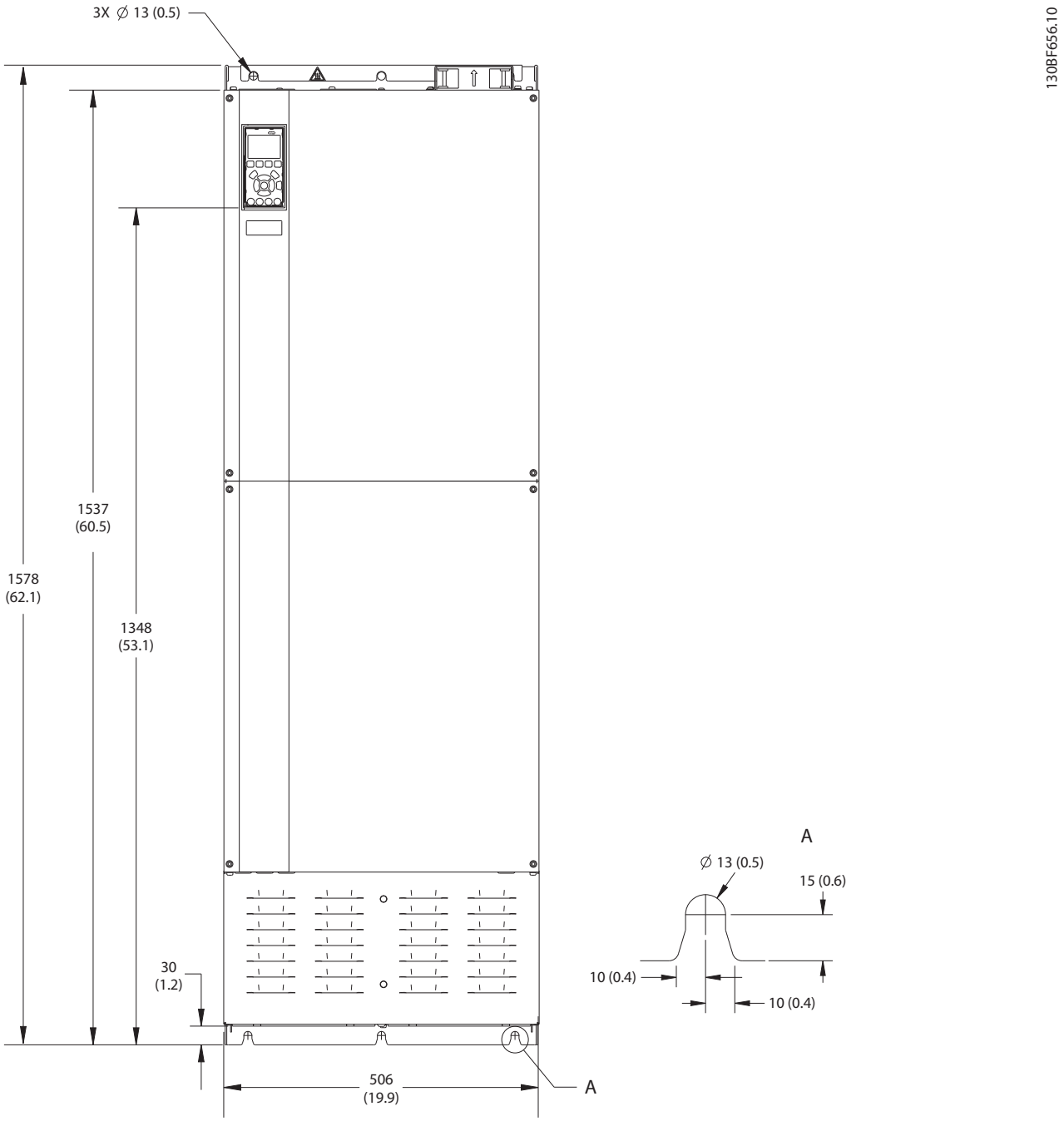

Illustration 8.82 Front View of E3h

 Danfoss A/S © 01/2018 All rights reserved.

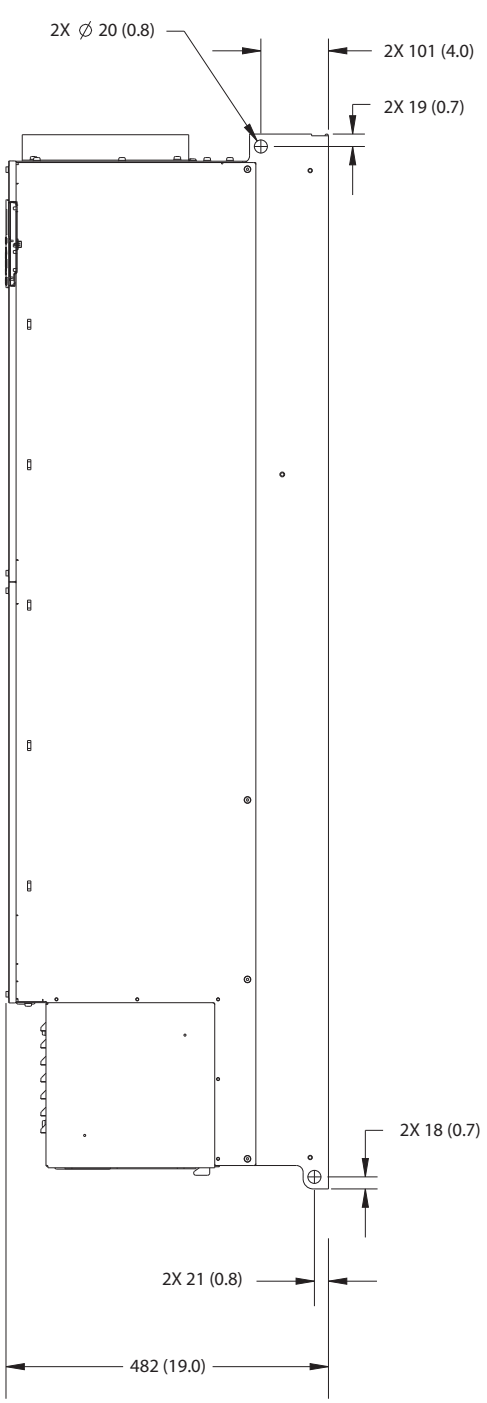

Illustration 8.83 Side View of E3h

 Danfoss A/S © 01/2018 All rights reserved.

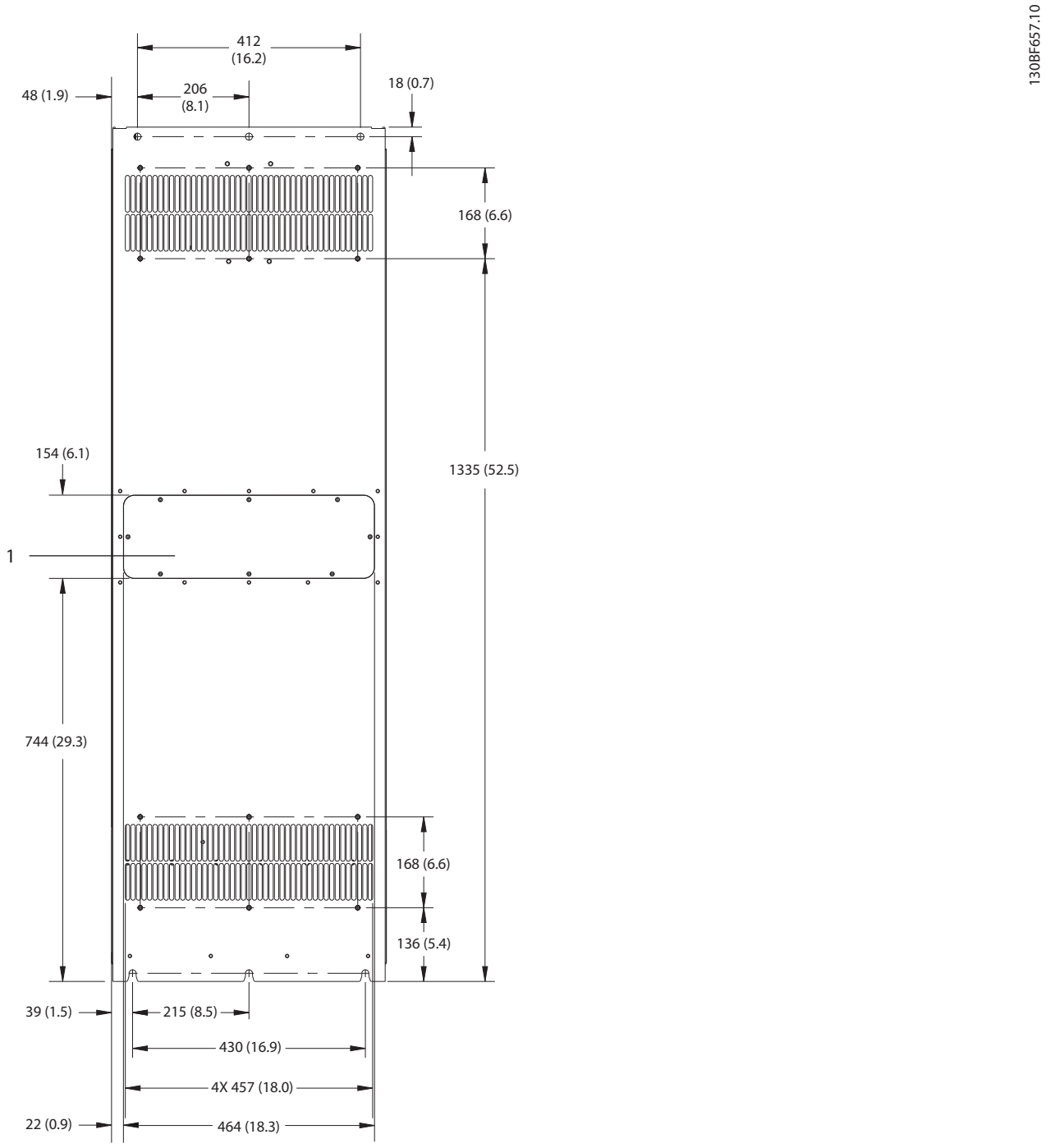

1	Heat sink access panel (optional)

Illustration 8.84 Back View of E3h

Danfoss A/S © 01/2018 All rights reserved.

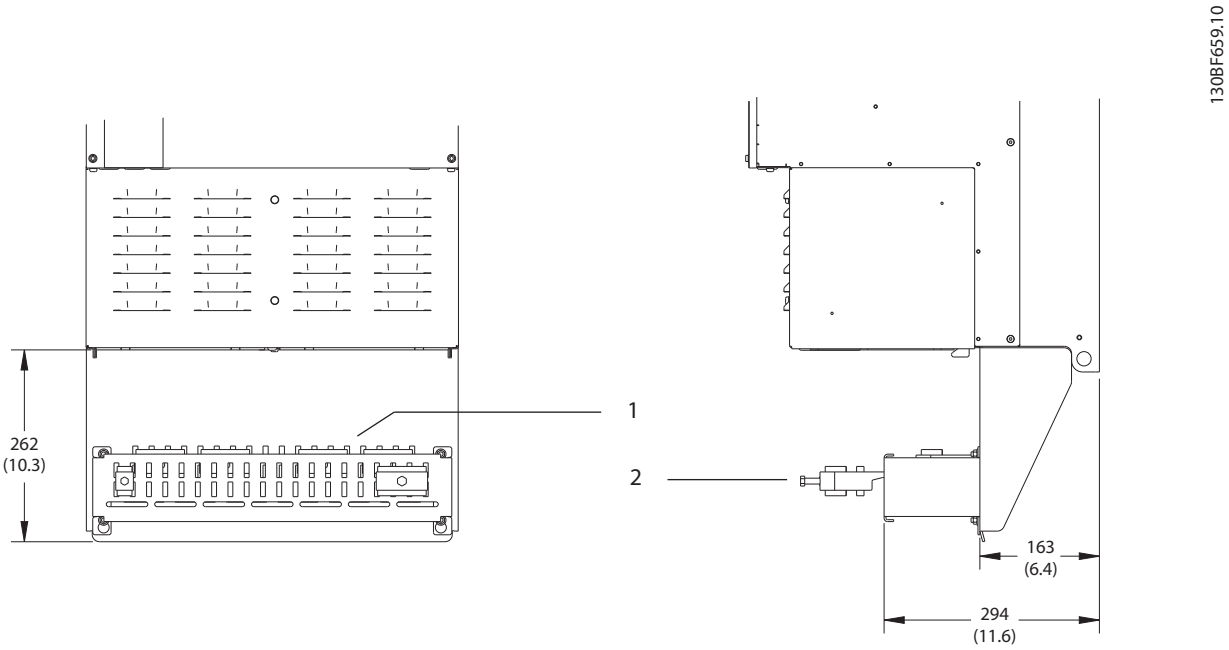

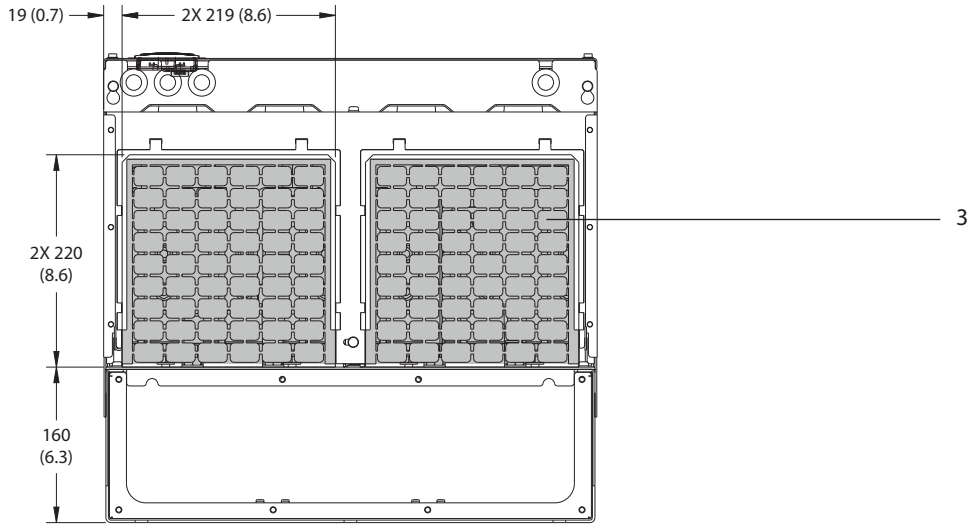

1	RFI shield termination (standard with RFI option)
2	Cable/EMC clamp
3	Gland plate

Illustration 8.85 RFI Shield Termination and Gland Plate Dimensions for E3h

 Danfoss A/S © 01/2018 All rights reserved.

8.11.2 E3h Terminal Dimensions

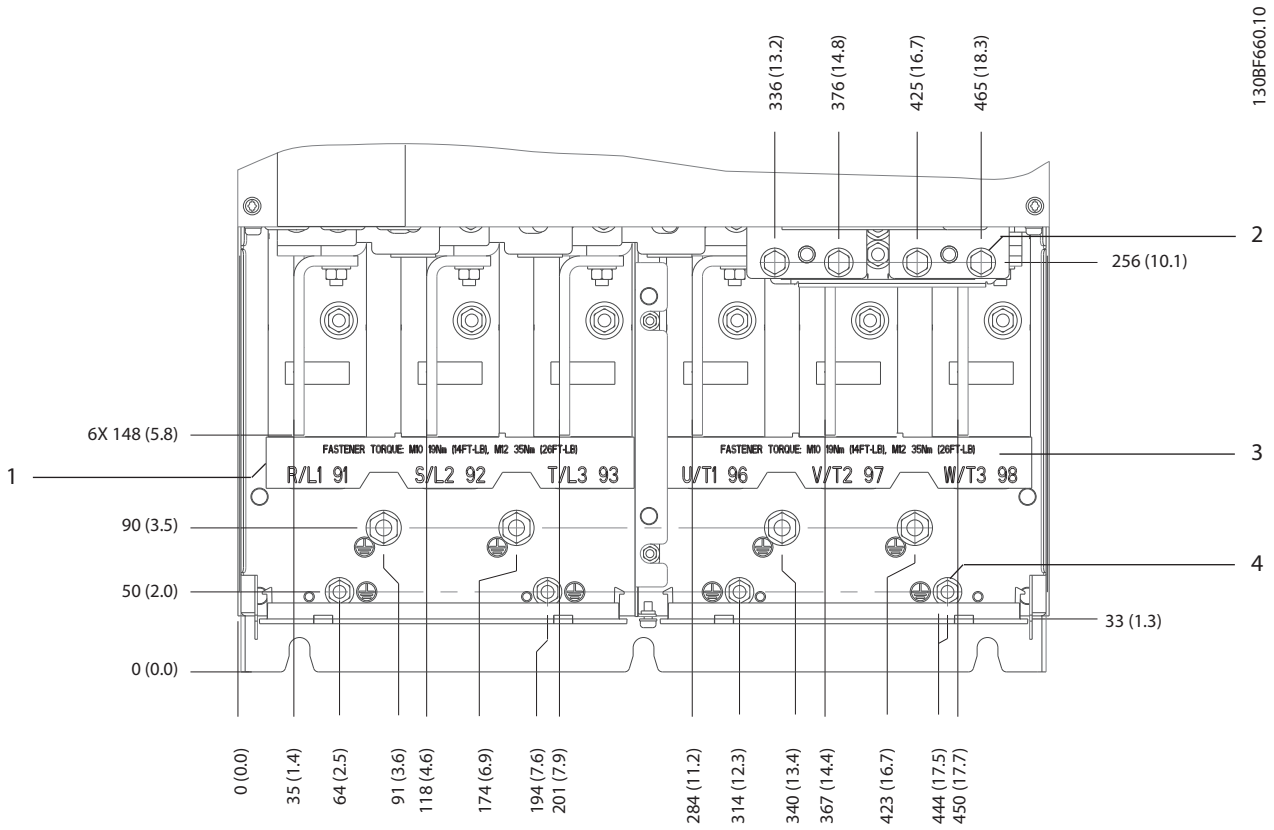

1	Mains terminals	3	Motor terminals
2	Brake or regen terminals	4	Ground terminals, M8 and M10 nuts

Illustration 8.86 E3h Terminal Dimensions (Front View)

Danfoss A/S © 01/2018 All rights reserved.

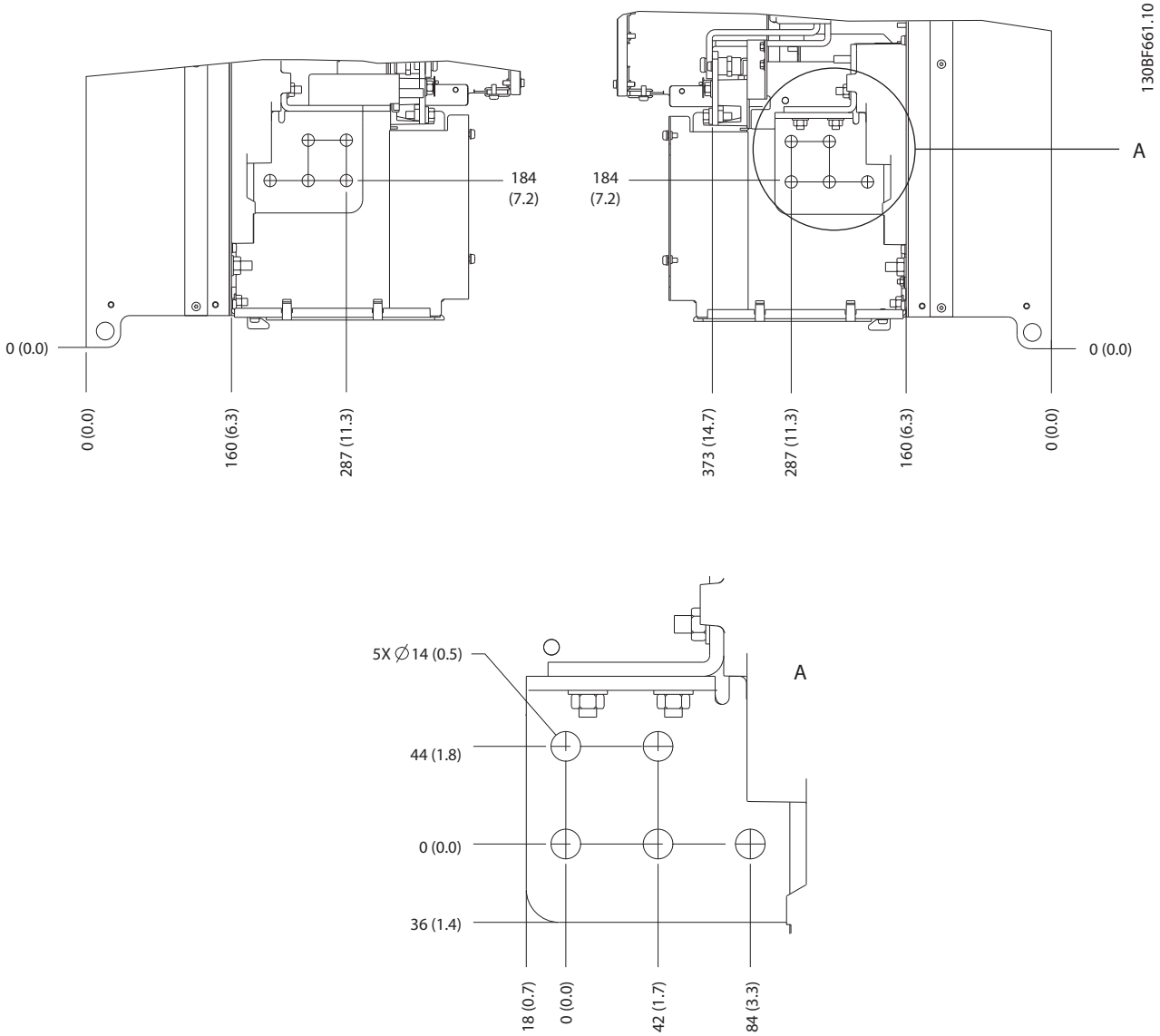

Illustration 8.87 E3h Mains, Motor, and Ground Terminal Dimensions (Side Views)

 Danfoss A/S © 01/2018 All rights reserved.

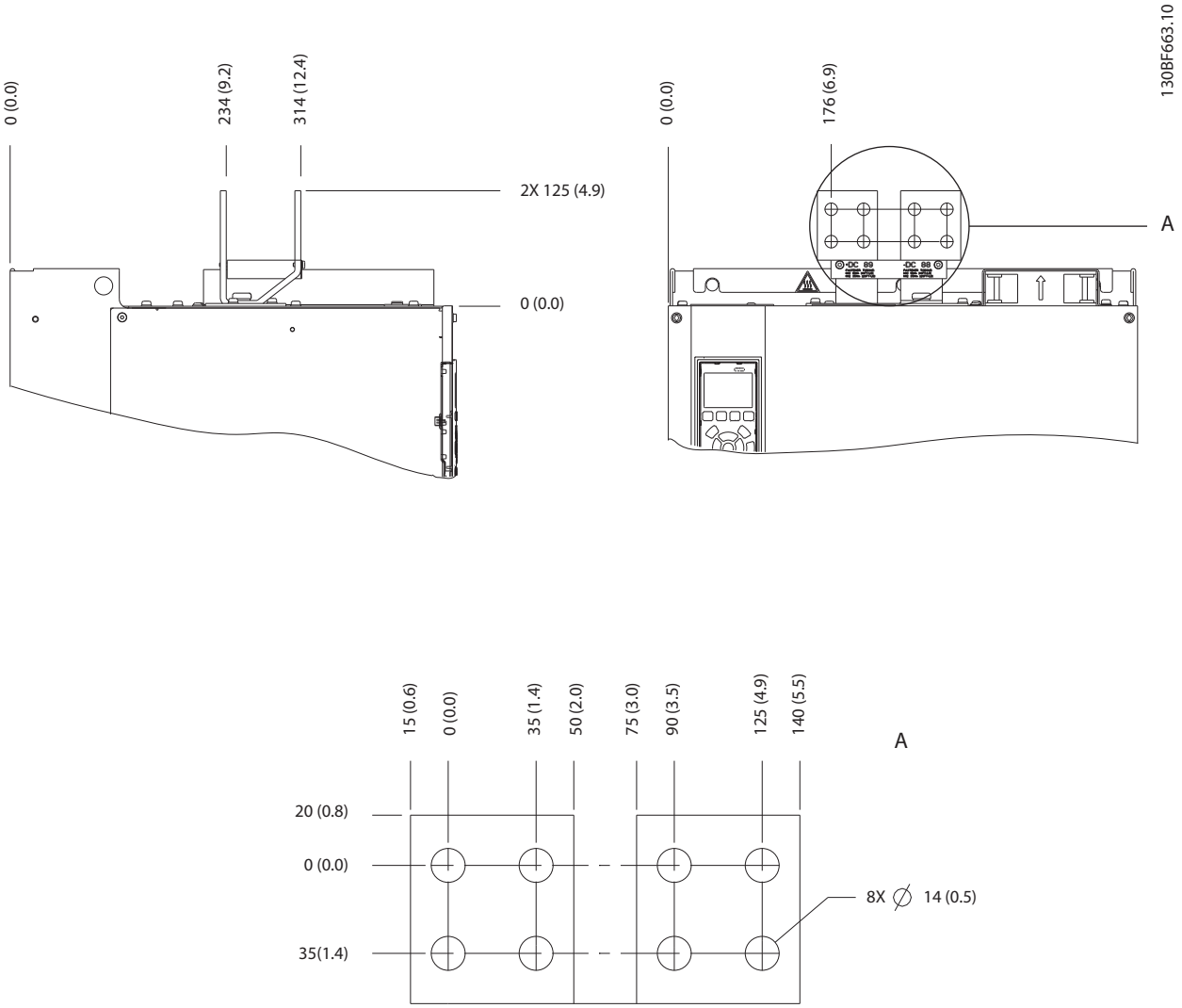

Illustration 8.88 E3h Load Share/Regen Terminal Dimensions

Danfoss A/S © 01/2018 All rights reserved.

8.12 E4h Exterior and Terminal Dimensions

8.12.1 E4h Exterior Dimensions

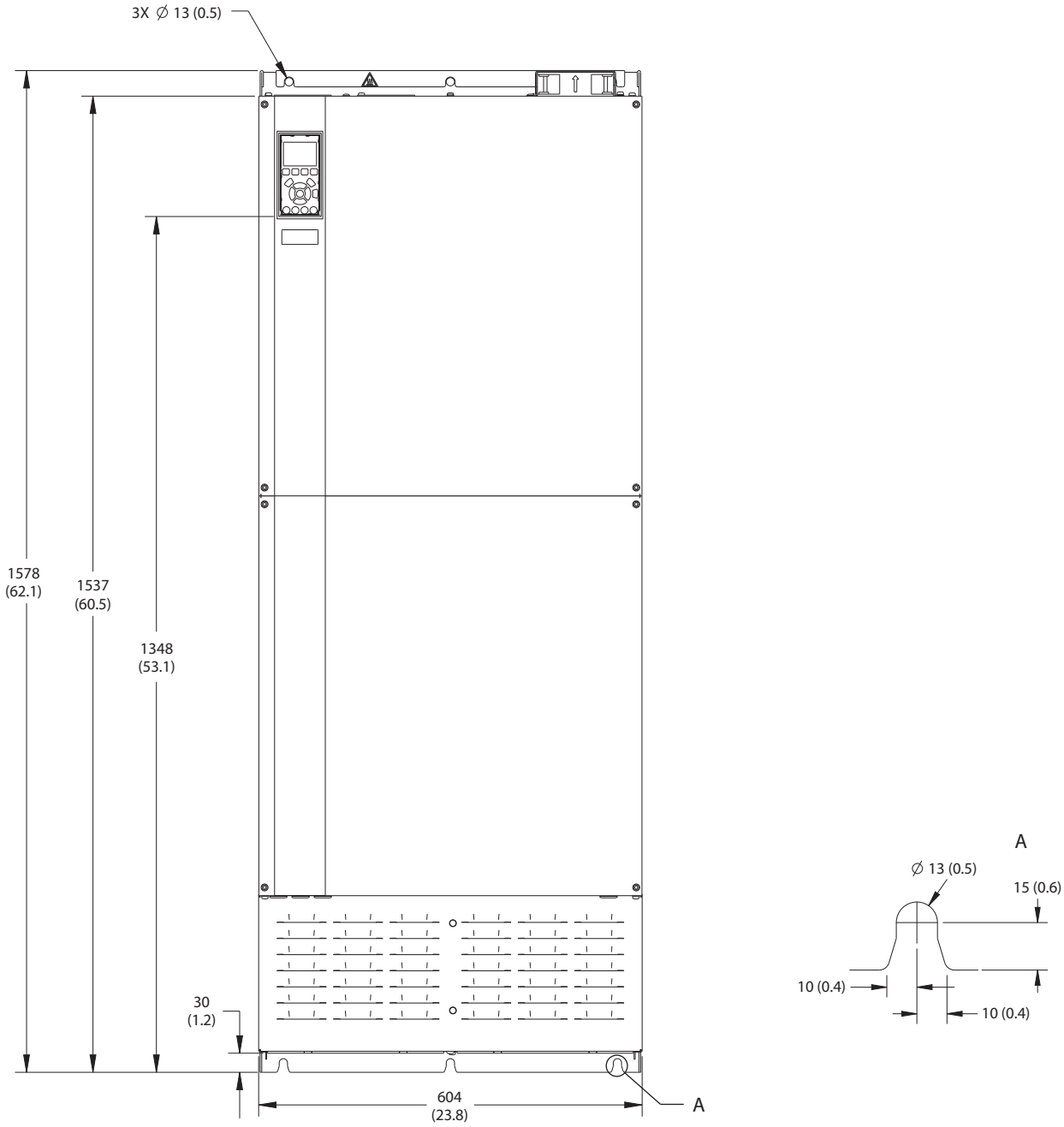

Illustration 8.89 Front View of E4h

 Danfoss A/S © 01/2018 All rights reserved.

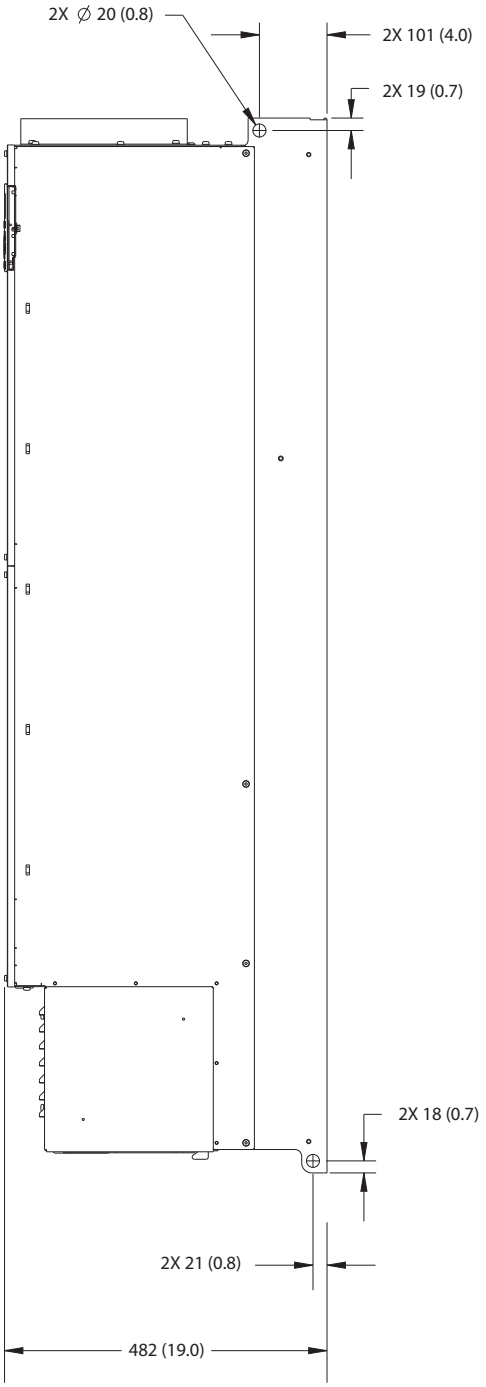

Illustration 8.90 Side View of E4h

 Danfoss A/S © 01/2018 All rights reserved.

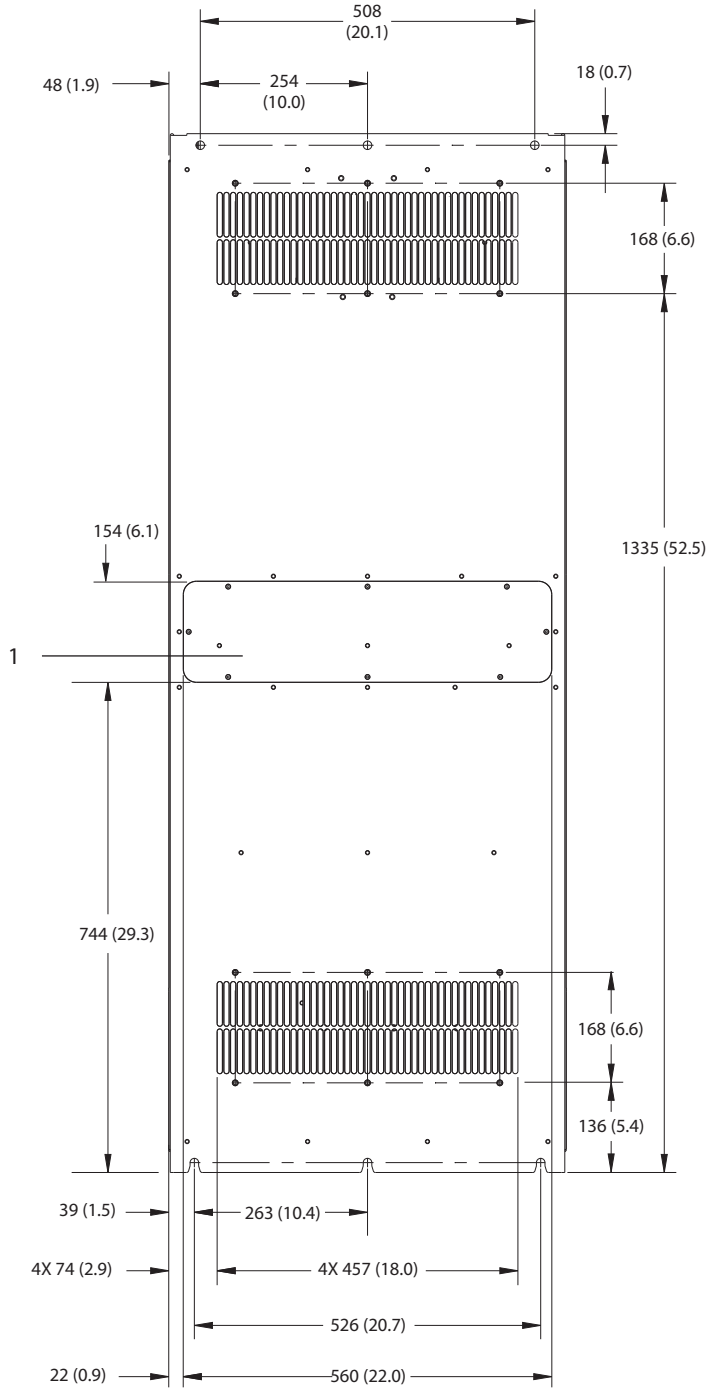

1	Heat sink access panel (optional)

Illustration 8.91 Back View of E4h

 Danfoss A/S © 01/2018 All rights reserved.

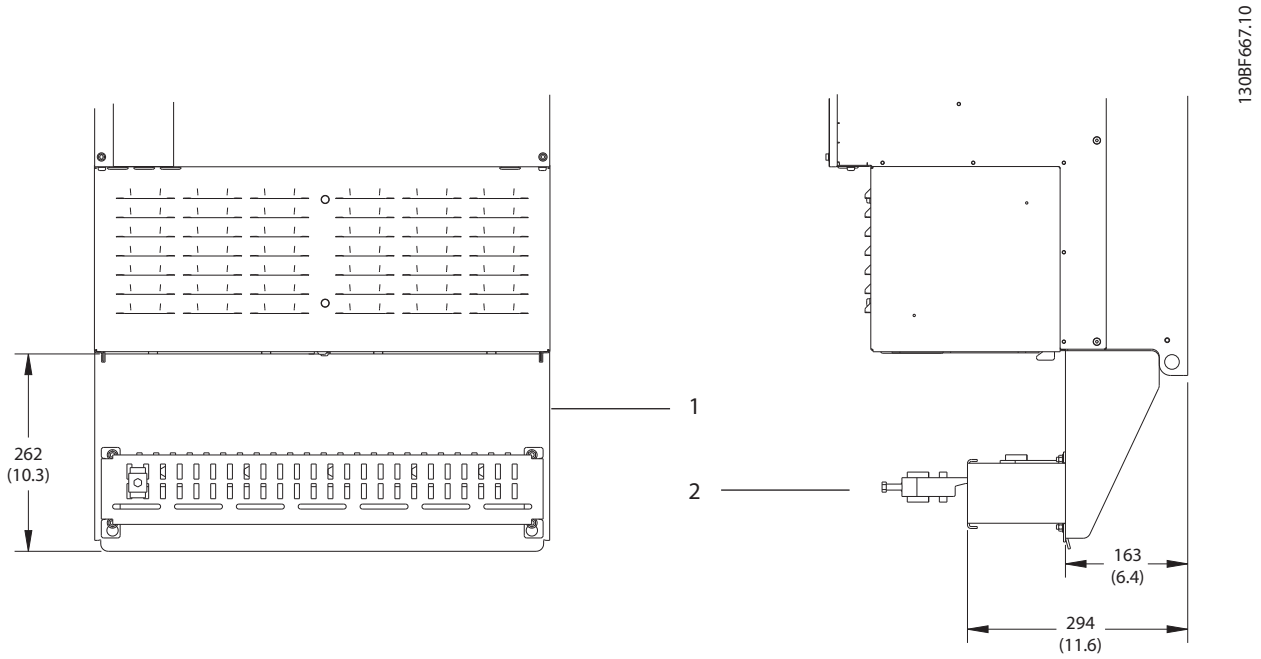

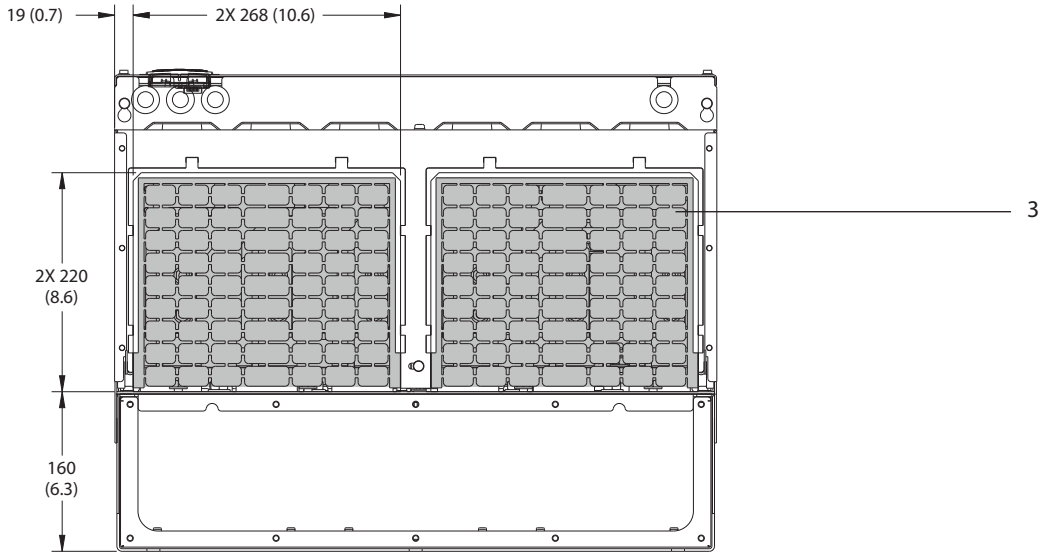

1	RFI shield termination (standard with RFI option)
2	Cable/EMC clamp
3	Gland plate

Illustration 8.92 RFI Shield Termination and Gland Plate Dimensions for E4h

 Danfoss A/S © 01/2018 All rights reserved.

8.12.2 E4h Terminal Dimensions

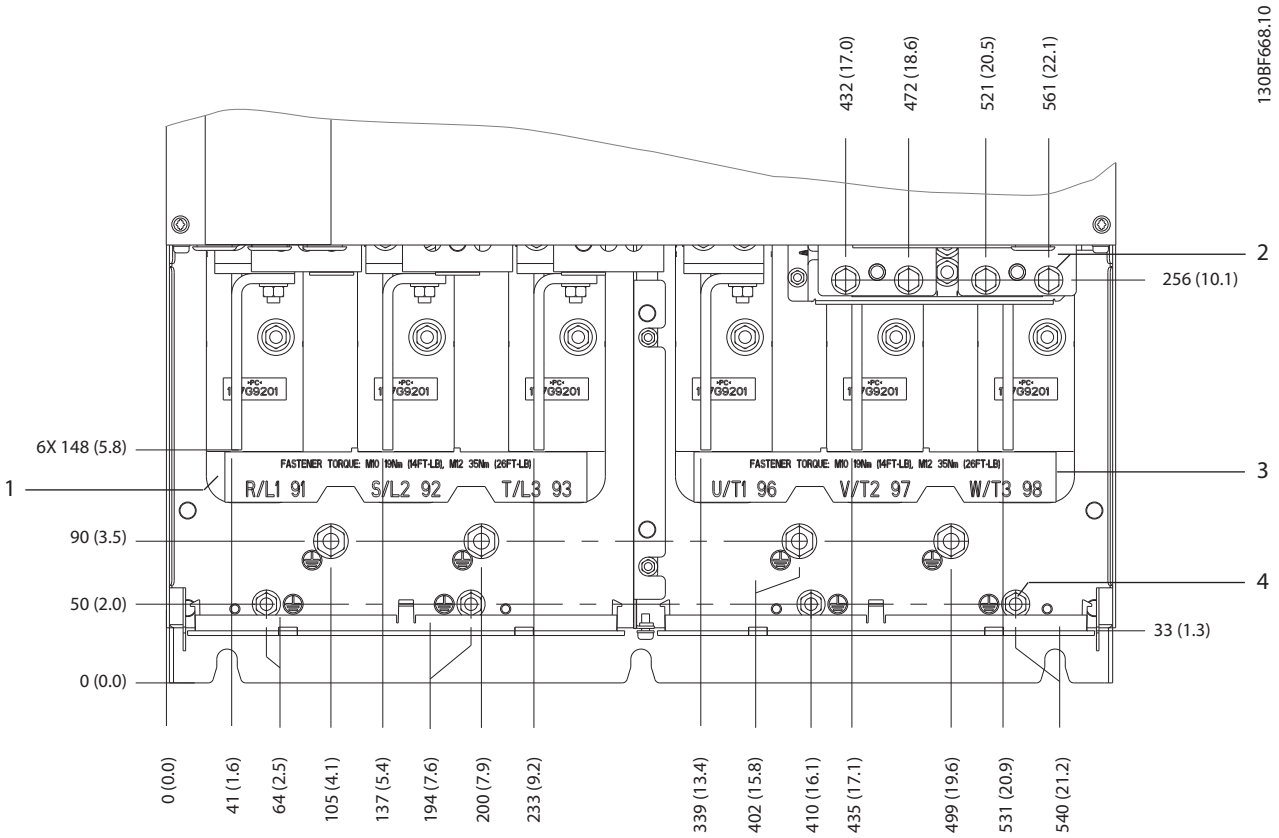

1	Mains terminals	3	Motor terminals
2	Brake or regen terminals	4	Ground terminals, M8 and M10 nuts

Illustration 8.93 E4h Terminal Dimensions (Front View)

8

 Danfoss A/S © 01/2018 All rights reserved.

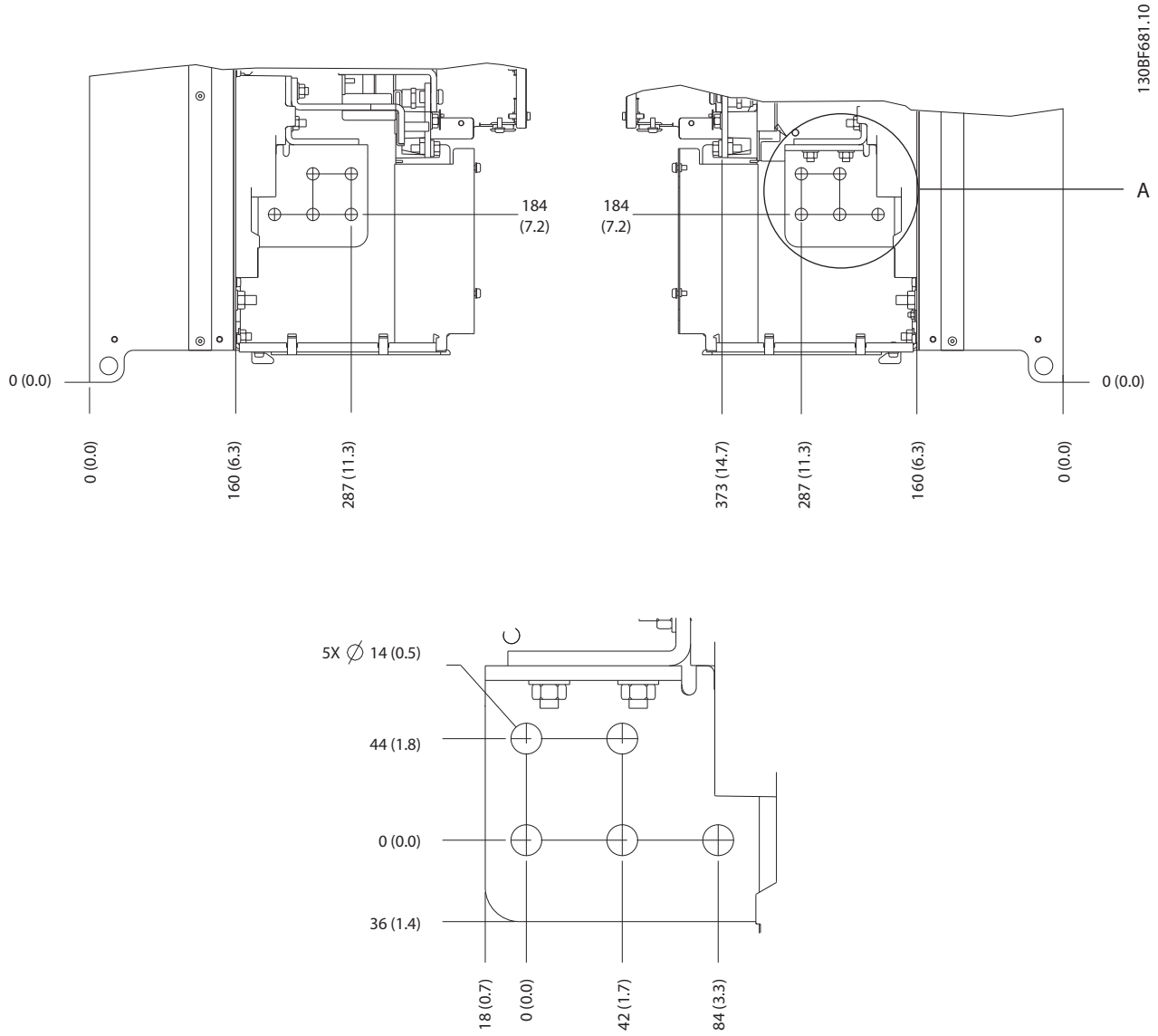

Illustration 8.94 E4h Mains, Motor, and Ground Terminal Dimensions (Side Views)

 Danfoss A/S © 01/2018 All rights reserved.

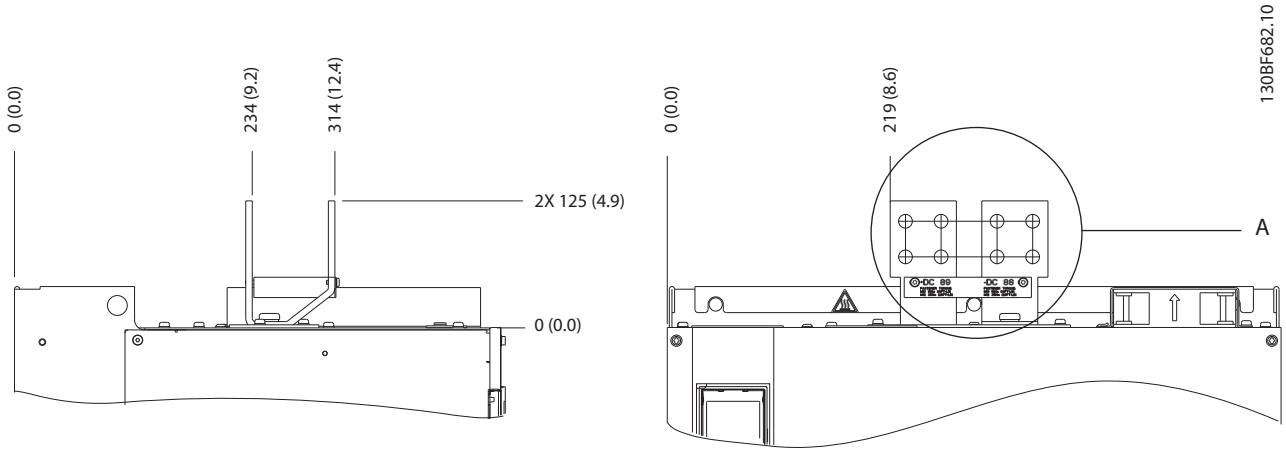

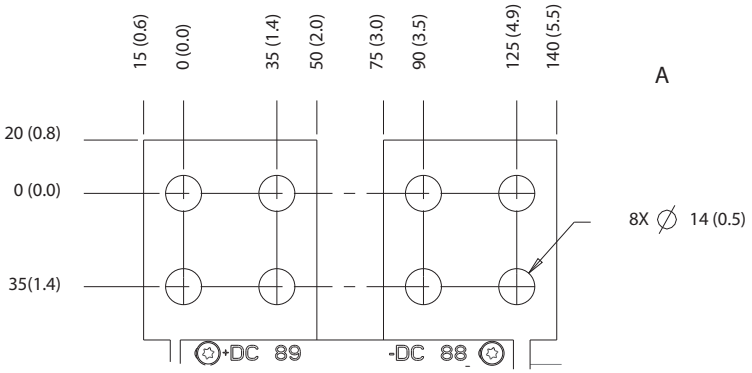

Illustration 8.95 E4h Load Share/Regen Terminal Dimensions

 Danfoss A/S © 01/2018 All rights reserved.

9 Mechanical Installation Considerations

9.1 Storage

Store the drive in a dry location. Keep the equipment sealed in its packaging until installation. Refer to *chapter 7.5 Ambient Conditions* for recommended ambient temperature.

Periodic forming (capacitor charging) is not necessary during storage unless storage exceeds 12 months.

9.2 Lifting the Unit

Always lift the drive using the dedicated lifting eyes. To avoid bending the lifting holes, use a bar.

⚠WARNING

RISK OF INJURY OR DEATH

Follow local safety regulations for lifting heavy weights. Failure to follow recommendations and local safety regulations can result in death or serious injury.

- **Ensure that the lifting equipment is in proper working condition.**
- **See *chapter 4 Product Overview* for the weight of the different enclosure sizes.**
- **Maximum diameter for bar: 20 mm (0.8 in).**
- **The angle from the top of the drive to the lifting cable: 60° or greater.**

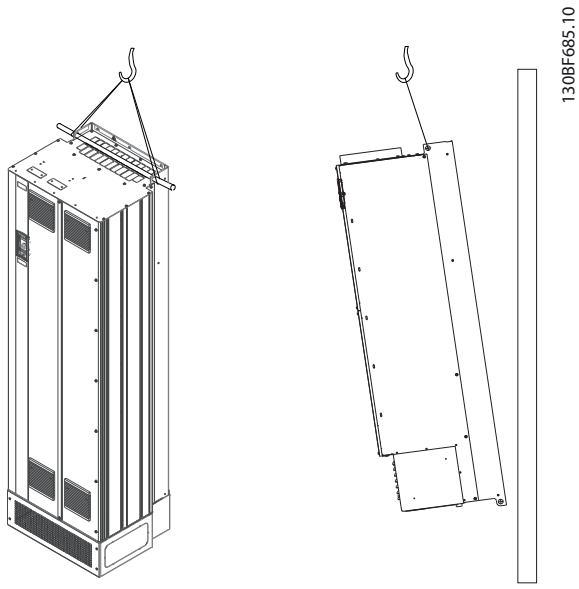

Illustration 9.1 Recommended Lifting Method

9.3 Operating Environment

In environments with airborne liquids, particles, or corrosive gases, ensure that the IP/Type rating of the equipment matches the installation environment. For specifications regarding ambient conditions, see *chapter 7.5 Ambient Conditions*.

NOTICE

CONDENSATION

Moisture can condense on the electronic components and cause short circuits. Avoid installation in areas subject to frost. Install an optional space heater when the drive is colder than the ambient air. Operating in standby mode reduces the risk of condensation as long as the power dissipation keeps the circuitry free of moisture.

NOTICE

EXTREME AMBIENT CONDITIONS

Hot or cold temperatures compromise unit performance and longevity.

- **Do not operate in environments where the ambient temperature exceeds 55 °C (131 °F).**
- **The drive can operate at temperatures down to -10 °C (14 °F). However, proper operation at rated load is only guaranteed at 0 °C (32 °F) or higher.**
- **If temperature exceeds ambient temperature limits, extra air conditioning of the cabinet or installation site is required.**

9.3.1 Gases

Aggressive gases, such as hydrogen sulphide, chlorine, or ammonia can damage the electrical and mechanical components. The unit uses conformal-coated circuit boards to reduce the effects of aggressive gases. For conformal-coating class specifications and ratings, see *chapter 7.5 Ambient Conditions*.

 Danfoss A/S © 01/2018 All rights reserved.

9.3.2 Dust

When installing the drive in dusty environments, pay attention to the following:

Periodic maintenance
When dust accumulates on electronic components, it acts as a layer of insulation. This layer reduces the cooling capacity of the components, and the components become warmer. The hotter environment decreases the life of the electronic components.

Keep the heat sink and fans free from dust build-up. For more service and maintenance information, refer to the *operating guide*.

Cooling fans
Fans provide airflow to cool the drive. When fans are exposed to dusty environments, the dust can damage the fan bearings and cause premature fan failure. Also, dust can accumulate on fan blades causing an imbalance which prevents the fans from properly cooling the unit.

9.3.3 Potentially Explosive Atmospheres

⚠WARNING

EXPLOSIVE ATMOSPHERE

Do not install the drive in a potentially explosive atmosphere. Install the unit in a cabinet outside of this area. Failure to follow this guideline increases risk of death or serious injury.

Systems operated in potentially explosive atmospheres must fulfill special conditions. EU Directive 94/9/EC (ATEX 95) classifies the operation of electronic devices in potentially explosive atmospheres.

- Class d specifies that if a spark occurs, it is contained in a protected area.
- Class e prohibits any occurrence of a spark.

Motors with class d protection
Does not require approval. Special wiring and containment are required.

Motors with class e protection
When combined with an ATEX approved PTC monitoring device like the VLT® PTC Thermistor Card MCB 112, installation does not need an individual approval from an approbated organization.

Motors with class d/e protection
The motor itself has an e ignition protection class, while the motor cabling and connection environment is in compliance with the d classification. To attenuate the high peak voltage, use a sine-wave filter at the drive output.

When using a drive in a potentially explosive atmosphere, use the following:

- Motors with ignition protection class d or e.
- PTC temperature sensor to monitor the motor temperature.
- Short motor cables.
- Sine-wave output filters when shielded motor cables are not used.

NOTICE

MOTOR THERMISTOR SENSOR MONITORING

Drives with the VLT® PTC Thermistor Card MCB 112 option are PTB-certified for potentially explosive atmospheres.

9.4 Mounting Configurations

Table 9.1 lists the available mounting configurations for each enclosure. For specific panel/wall mounting or pedestal mounting installation instructions, see the *operating guide*. See also *chapter 8 Exterior and Terminal Dimensions*.

NOTICE

Improper mounting can result in overheating and reduced performance.

Enclosure	Wall/cabinet mount	Pedestal mount (Standalone)
D1h	X	X
D2h	X	X
D3h	X[1)]	–
D4h	X[1)]	–
D5h	–	X
D6h	–	X
D7h	–	X
D8h	–	X
E1h	–	X
E2h	–	X
E3h	X[2)]	–
E4h	X[2)]	–

Table 9.1 Mounting Configurations

1) Can be wall mounted, but Danfoss recommends that the drive is panel mounted inside an enclosure due to its protection rating.
2) Drive can be mounted in the following configurations:

- *Vertically on the backplate of the panel.*
- *Vertically upside down on the backplate of the panel. Contact factory.*
- *Horizontally on its back, mounted on the backplate of the panel. Contact factory.*
- *Horizontally on its side, mounted on floor of the panel. Contact factory.*

 Danfoss A/S © 01/2018 All rights reserved.

Mounting considerations:

- Locate the unit as near to the motor as possible. See *chapter 7.6 Cable Specifications* for the maximum motor cable length.
- Ensure unit stability by mounting the unit to a solid surface.
- Ensure that the strength of the mounting location supports the unit weight.
- Ensure that there is enough space around the unit for proper cooling. Refer to *chapter 5.7 Back-channel Cooling Overview*.
- Ensure enough access to open the door.
- Ensure cable entry from the bottom.

9.5 Cooling

NOTICE

Improper mounting can result in overheating and reduced performance. For proper mounting, refer to *chapter 9.4 Mounting Configurations*.

- Ensure that top and bottom clearance for air cooling is provided. Clearance requirement: 225 mm (9 in).
- Provide sufficient airflow flow rate. See *Table 9.2*.
- Consider derating for temperatures starting between 45 °C (113 °F) and 50 °C (122 °F) and elevation 1000 m (3300 ft) above sea level. See *chapter 9.6 Derating* for detailed information on derating.

The drive utilizes a back-channel cooling concept that removes heat sink cooling air. The heat sink cooling air carries approximately 90% of the heat out of the back channel of the drive. Redirect the back-channel air from the panel or room by using:

- **Duct cooling**
  Back-channel cooling kits are available to direct the heat sink cooling air out of the panel when IP20/Chassis drives are installed in Rittal enclosures. Use of these kits reduce the heat in the panel and smaller door fans can be specified.
- **Back-wall cooling**
  Installing top and base covers to the unit allows the back-channel cooling air to be ventilated out of the room.

NOTICE

For E3h and E4h enclosures (IP20/Chassis), at least 1 door fan is required on the enclosure to remove the heat not contained in the back-channel of the drive. It also removes any additional losses generated by other components inside the drive. To select the appropriate fan size, calculate the total required airflow.

Secure the necessary airflow over the heat sink.

Frame	Door fan/top fan [m³/hr (cfm)]	Heat sink fan [m³/hr (cfm)]
D1h	102 (60)	420 (250)
D2h	204 (120)	840 (500)
D3h	102 (60)	420 (250)
D4h	204 (120)	840 (500)
D5h	102 (60)	420 (250)
D6h	102 (60)	420 (250)
D7h	204 (120)	840 (500)
D8h	204 (120)	840 (500)

Table 9.2 D1h–D8h Airflow Rate

Frame	Door fan/top fan [m³/hr (cfm)]	Heat sink fan [m³/hr (cfm)]
E1h	510 (300)	994 (585)
E2h	552 (325)	1053–1206 (620–710)
E3h	595 (350)	994 (585)
E4h	629 (370)	1053–1206 (620–710)

Table 9.3 E1h–E4h Airflow Rate

9.6 Derating

Derating is a method used to reduce output current to avoid tripping the drive when high temperatures are reached within the enclosure. If certain extreme operating conditions are expected, a higher-powered drive can be selected to eliminate the need for derating. This is called manual derating. Otherwise, the drive automatically derates the output current to eliminate the excessive heat generated by extreme conditions.

Manual derating

When the following conditions are present, Danfoss recommends selecting a drive 1 power size higher (for example P710 instead of P630):

- Low-speed – continuous operation at low RPM in constant torque applications.
- Low air pressure – operating at altitudes above 1000 m (3281 ft).
- High ambient temperature – operating at ambient temperatures of 10 °C (50 °F).
- High switching frequency.
- Long motor cables.
- Cables with a large cross-section.

 Danfoss A/S © 01/2018 All rights reserved.

Automatic derating
If the following operating conditions are found, the drive automatically changes switching frequency or switching pattern (PWM to SFAVM) to reduce excessive heat within the enclosure:

- High temperature on the control card or heat sink.
- High motor load or low motor speed.
- High DC-link voltage.

NOTICE

Automatic derating is different when *parameter 14-55 Output Filter* is set to *[2] Sine-Wave Filter Fixed*.

9.6.1 Derating for Low-Speed Operation

When a motor is connected to a drive, it is necessary to check that the cooling of the motor is adequate. The level of cooling required depends on the following:

- Load on the motor.
- Operating speed.
- Length of operating time.

Constant torque applications
A problem can occur at low RPM values in constant torque applications. In a constant torque application, a motor can overheat at low speeds because less cooling air is being provided by the fan within the motor.

If the motor is run continuously at an RPM value lower than half of the rated value, the motor must be supplied with extra air cooling. If extra air cooling cannot be provided, a motor designed for low RPM/constant torque applications can be used instead.

Variable (quadratic) torque applications
Extra cooling or derating of the motor is not required in variable torque applications where the torque is proportional to the square of the speed, and the power is proportional to the cube of the speed. Centrifugal pumps and fans are common variable torque applications.

9.6.2 Derating for Altitude

The cooling capability of air is decreased at lower air pressure. No derating is necessary at or below 1000 m (3281 ft). Above 1000 m (3281 ft), the ambient temperature (T_{AMB}) or maximum output current (I_{MAX}) should be derated. Refer to *Illustration 9.2*.

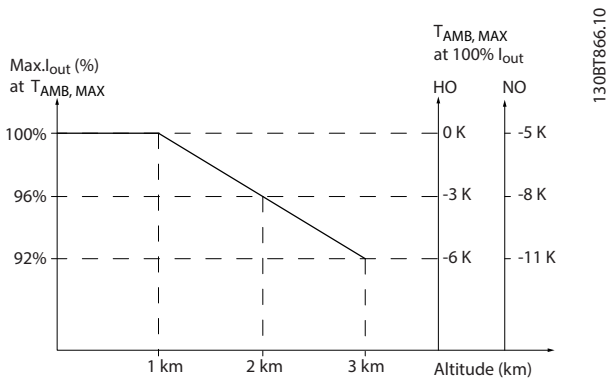

Illustration 9.2 Derating of Output Current Based on Altitude at $T_{AMB,MAX}$

Illustration 9.2 shows that at 41.7 °C (107 °F), 100% of the rated output current is available. At 45 °C (113 °F) (T_{AMB}, MAX-3 K), 91% of the rated output current is available.

 Danfoss A/S © 01/2018 All rights reserved.

9.6.3 Derating for Ambient Temperature and Switching Frequency

NOTICE

FACTORY DERATING

Danfoss drives are already derated for operational temperature (55 °C (131 °F) $T_{AMB,MAX}$ and 50 °C (122 °F) $T_{AMB,AVG}$).

Use the graphs in *Table 9.4* to *Table 9.5* to determine if the output current must be derated based on switching frequency and ambient temperature. When referring to the graphs, I_{out} indicates the percentage of rated output current, and *fsw* indicates the switching frequency.

Enclosure	Switching pattern	High overload HO, 150%	Normal overload NO, 110%
D1h–D8h N90 to N250 380–500 V	60 AVM	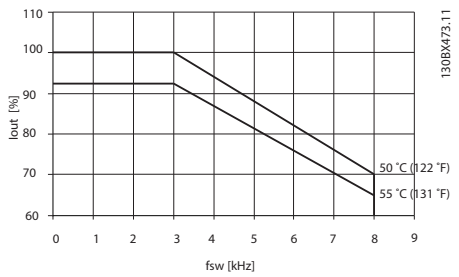	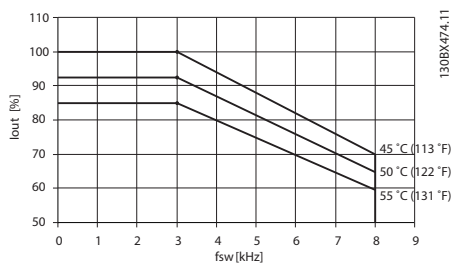
	SFAVM	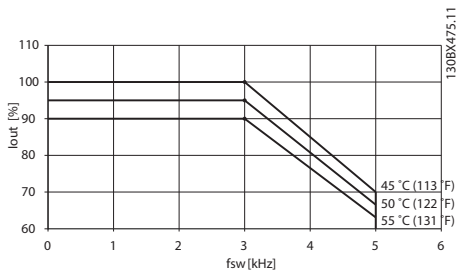	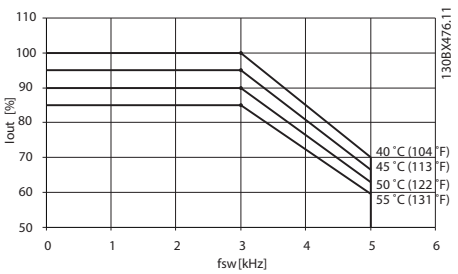
E1h–E4h N315 to N500 380–500 V	60 AVM	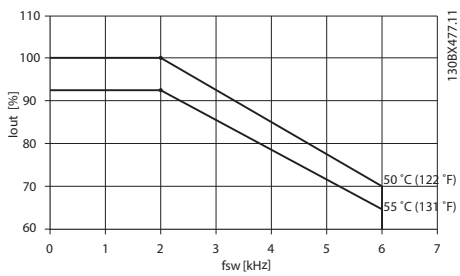	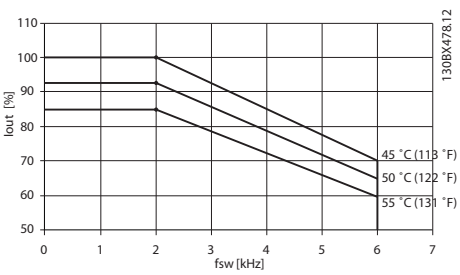
	SFAVM	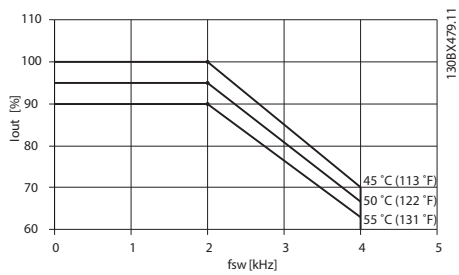	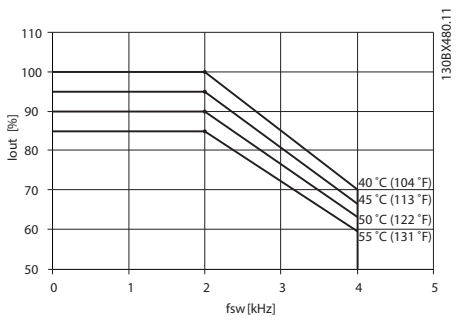

Table 9.4 Derating Tables for Drives Rated 380–500 V

 Danfoss A/S © 01/2018 All rights reserved.

Enclosure	Switching pattern	High overload HO, 150%	Normal overload NO, 110%
D1h–D8h N55K to N315 525–690 V	60 AVM	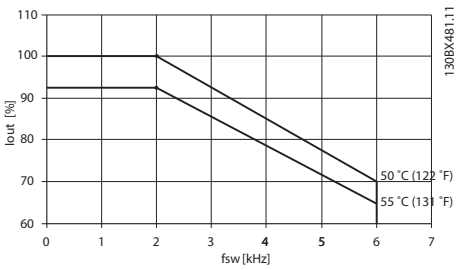	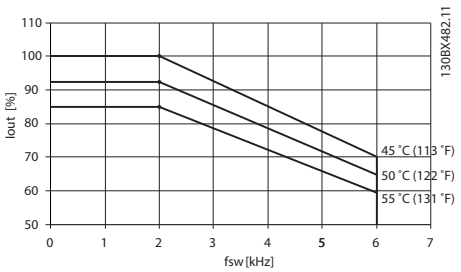
	SFAVM	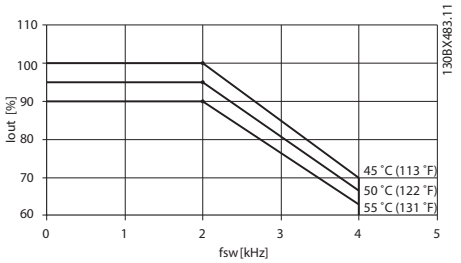	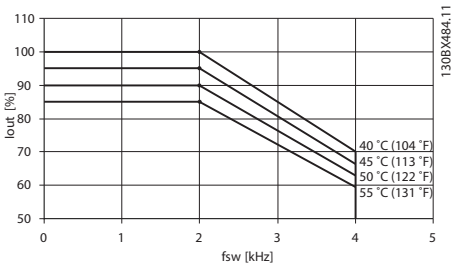
E1h–E4h N355 to N710 525–690 V	60 AVM	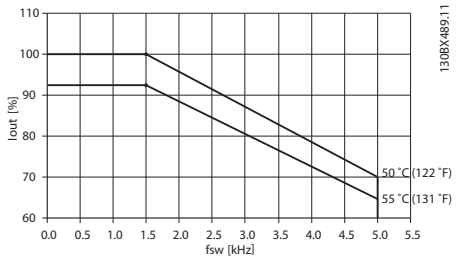	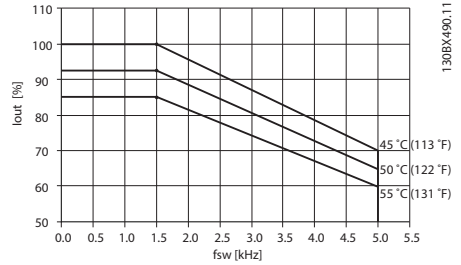
	SFAVM	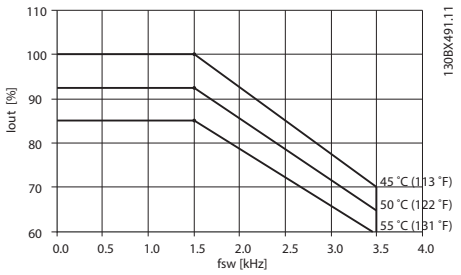	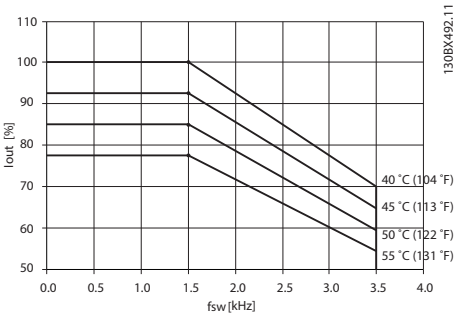

Table 9.5 Derating Tables for Drives Rated 525–690 V

9

 Danfoss A/S © 01/2018 All rights reserved.

10 Electrical Installation Considerations

10.1 Safety Instructions

See *chapter 2 Safety* for general safety instructions.

⚠WARNING

INDUCED VOLTAGE

Induced voltage from output motor cables from different drives that are run together can charge equipment capacitors even with the equipment turned off and locked out. Failure to run output motor cables separately or use shielded cables could result in death or serious injury.

- **Run output motor cables separately or use shielded cables.**
- **Simultaneously lock out all the drives.**

⚠WARNING

SHOCK HAZARD

The drive can cause a DC current in the ground conductor and thus result in death or serious injury.

- **When a residual current-operated protective device (RCD) is used for protection against electrical shock, only an RCD of Type B is allowed on the supply side.**

Failure to follow the recommendation means that the RCD cannot provide the intended protection.

Overcurrent protection

- Extra protective equipment such as short-circuit protection or motor thermal protection between drive and motor is required for applications with multiple motors.
- Input fusing is required to provide short circuit and overcurrent protection. If fuses are not factory-supplied, the installer must provide them. See maximum fuse ratings in *chapter 10.5 Fuses and Circuit Breakers*.

Wire type and ratings

- All wiring must comply with local and national regulations regarding cross-section and ambient temperature requirements.
- Power connection wire recommendation: Minimum 75 °C (167 °F) rated copper wire.

See *chapter 7.6 Cable Specifications* for recommended wire sizes and types.

⚠CAUTION

PROPERTY DAMAGE

Protection against motor overload is not included in the default setting. To add this function, set *parameter 1-90 Motor Thermal Protection* to *[ETR trip]* or *[ETR warning]*. For the North American market, the ETR function provides class 20 motor overload protection in accordance with NEC. Failure to set *parameter 1-90 Motor Thermal Protection* to *[ETR trip]* or *[ETR warning]* means that motor overload protection is not provided and, if the motor overheats, property damage can occur.

 Danfoss A/S © 01/2018 All rights reserved.

10.2 Wiring Schematic

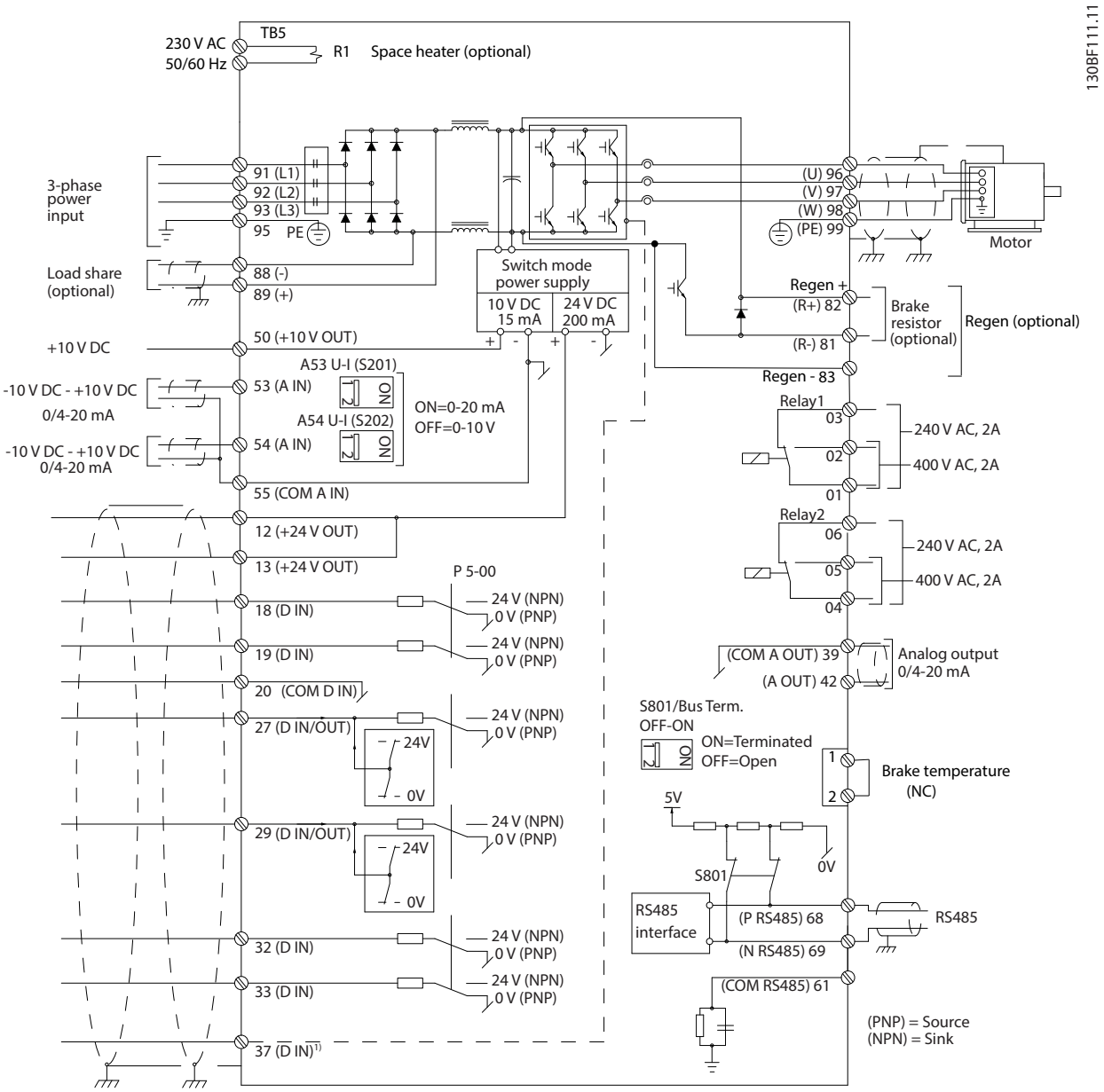

Illustration 10.1 Basic Wiring Schematic

A=Analog, D=Digital

1) Terminal 37 (optional) is used for Safe Torque Off. For Safe Torque Off installation instructions, refer to the VLT® FC Series - Safe Torque Off Operating Guide.

 Danfoss A/S © 01/2018 All rights reserved.

10.3 Connections

10.3.1 Power Connections

NOTICE

All cabling must comply with national and local regulations on cable cross-sections and ambient temperature. UL applications require 75 °C (167 °F) copper conductors. Non-UL applications can use 75 °C (167 °F) and 90 °C (194 °F) copper conductors.

The power cable connections are located as shown in *Illustration 10.2*. See *chapter 7 Specifications* for correct dimensioning of motor cable cross-section and length.

For protection of the drive, use the recommended fuses unless the unit has built-in fuses. Recommended fuses are listed in *chapter 10.5 Fuses and Circuit Breakers*. Ensure that proper fusing complies with local regulations.

The connection of mains is fitted to the mains switch if included.

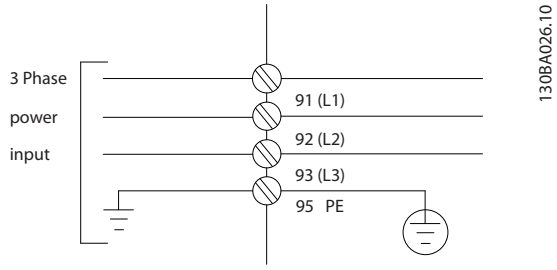

Illustration 10.2 Power Cable Connections

NOTICE

The motor cable must be shielded/armored. If an unshielded/unarmored cable is used, some EMC requirements are not complied with. Use a shielded/armored motor cable to comply with EMC emission specifications. For more information, see *chapter 10.15 EMC-compliant Installation*.

Shielding of cables

Avoid installation with twisted shield ends (pigtails). They spoil the shielding effect at higher frequencies. If it is necessary to break the shield to install a motor isolator or contactor, continue the shield at the lowest possible HF impedance.

Connect the motor cable shield to both the decoupling plate of the drive and the metal housing of the motor.

Make the shield connections with the largest possible surface area (cable clamp) by using the installation devices within the drive.

Cable length and cross-section

The drive has been EMC tested with a given length of cable. Keep the motor cable as short as possible to reduce the noise level and leakage currents.

Switching frequency

When drives are used together with sine-wave filters to reduce the acoustic noise from a motor, the switching frequency must be set according to the instructions in *parameter 14-01 Switching Frequency*.

Terminal	96	97	98	99	Description
	U	V	W	PE[1)]	Motor voltage 0–100% of mains voltage. 3 wires out of motor.
	U1	V1	W1	PE[1)]	Delta-connected.
	W2	U2	V2	PE[1)]	6 wires out of motor.
	U1	V1	W1	PE[1)]	Star-connected U2, V2, W2 U2, V2, and W2 to be interconnected separately.

Table 10.1 Motor Cable Connection

1) Protected ground connection

NOTICE

In motors without phase insulation, paper, or other insulation reinforcement suitable for operation with voltage supply, use a sine-wave filter on the output of the drive.

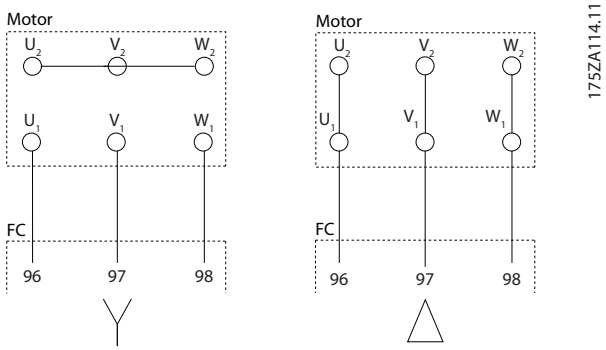

Illustration 10.3 Motor Cable Connection

 Danfoss A/S © 01/2018 All rights reserved.

10.3.2 DC Bus Connection

The DC bus terminal is used for DC back-up, with the DC link being supplied from an external source.

Terminal	Function
88, 89	DC Bus

Table 10.2 DC Bus Terminals

10.3.3 Load Sharing Connection

Load sharing links together the DC intermediate circuits of several drives. For an overview, see *chapter 5.5 Load Share Overview*.

The load sharing feature requires extra equipment and safety considerations. Consult Danfoss for ordering and installation recommendations.

Terminal	Function
88, 89	Load sharing

Table 10.3 Load Sharing Terminals

The connection cable must be shielded and the maximum length from the drive to the DC bar is limited to 25 m (82 ft).

10.3.4 Brake Cable Connection

The connection cable to the brake resistor must be shielded and the maximum length from the drive to the DC bar is limited to 25 m (82 ft).

- Use cable clamps to connect the shield to the conductive backplate on the drive and to the metal cabinet of the brake resistor.
- Size the brake cable cross-section to match the brake torque.

Terminal	Function
81, 82	Brake resistor terminals

Table 10.4 Brake Resistor Terminals

See the *VLT® Brake Resistor MCE 101 Design Guide* for more details.

NOTICE

If a short circuit in the brake module occurs, prevent excessive power dissipation in the brake resistor by using a mains switch or contactor to disconnect the mains from the drive.

10.3.5 Personal Computer Connection

To control the drive from a PC, install the MCT 10 Set-up Software. The PC is connected via a standard (host/device) USB cable, or via the RS485 interface. For more information on RS485, see the *RS485 Installation and Set-up section* in the *VLT® AutomationDrive FC 302, 315–1200 kW Design Guide*.

USB is a universal serial bus utilizing 4 shielded wires with ground pin 4 connected to the shield in the PC USB port. All standard PCs are manufactured without galvanic isolation in the USB port.
To prevent damage to the USB host controller through the shield of the USB cable, follow the ground recommendations described in the *operating guide*.
When connecting the PC to the drive through a USB cable, Danfoss recommends using a USB isolator with galvanic isolation to protect the PC USB host controller from ground potential differences. It is also recommended not to use a PC power cable with a ground plug when the PC is connected to the drive through a USB cable. These recommendations reduce the ground potential difference, but does not eliminate all potential differences due to the ground and shield connected in the PC USB port.

 Danfoss A/S © 01/2018 All rights reserved.

10.4 Control Wiring and Terminals

Control cables must be shielded and the shield must be connected with a cable clamp at both ends to the metal cabinet of the unit.

For correct grounding of control cables, see *Illustration 10.4*.

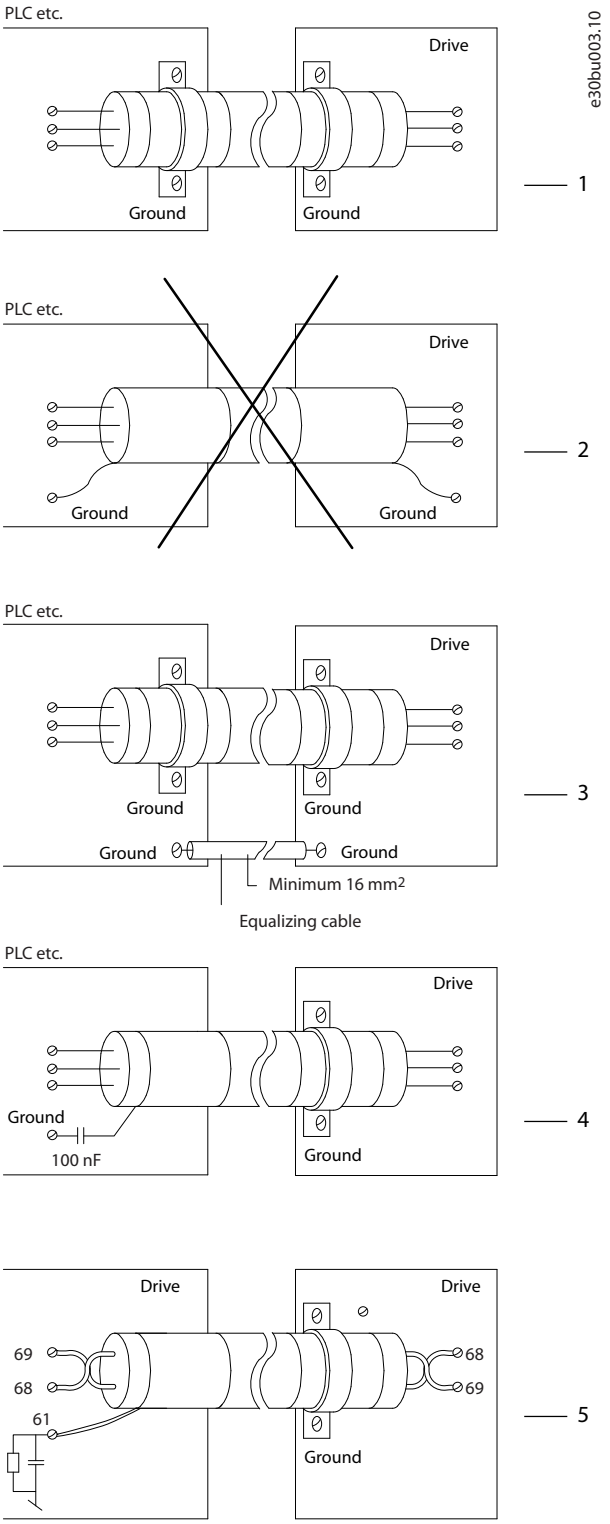

1	Control cables and serial communication cables must be fitted with cable clamps at both ends to ensure the best possible electrical contact.
2	Do not use twisted cable ends (pigtails). They increase the shield impedance at high frequencies.
3	If the ground potential between the drive and the PLC is different, electric noise can occur that disturbs the entire system. Fit an equalizing cable next to the control cable. Minimum cable cross-section: 16 mm^2 (6 AWG).
4	If long control cables are used, 50/60 Hz ground loops are possible. Connect 1 end of the shield to ground via a 100 nF capacitor (keeping leads short).
5	When using cables for serial communication, eliminate low-frequency noise currents between 2 drives by connecting 1 end of the shield to terminal 61. This terminal is connected to ground via an internal RC link. Use twisted-pair cables for reducing the differential mode interference between the conductors.

Illustration 10.4 Grounding Examples

10.4.1 Control Cable Routing

Tie down and route all control wires as shown in *Illustration 10.5*. Remember to connect the shields in a proper way to ensure optimum electrical immunity.

- Isolate control wiring from high-power cables.
- When the drive is connected to a thermistor, ensure that the thermistor control wiring is shielded and reinforced/double insulated. A 24 V DC supply voltage is recommended.

Fieldbus connection
Connections are made to the relevant options on the control card. See the relevant fieldbus instruction. The cable must be tied down and routed along with other control wires inside the unit. See *Illustration 10.5*.

 Danfoss A/S © 01/2018 All rights reserved.

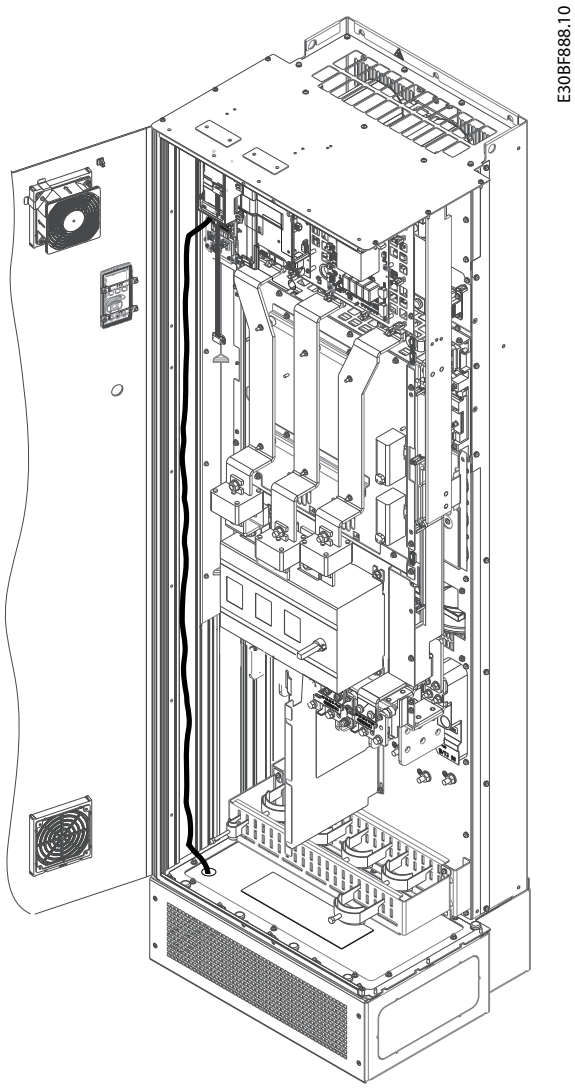

Illustration 10.5 Control card wiring path for the E1h. Same routing path for enclosures E2h and D1h–D8h.

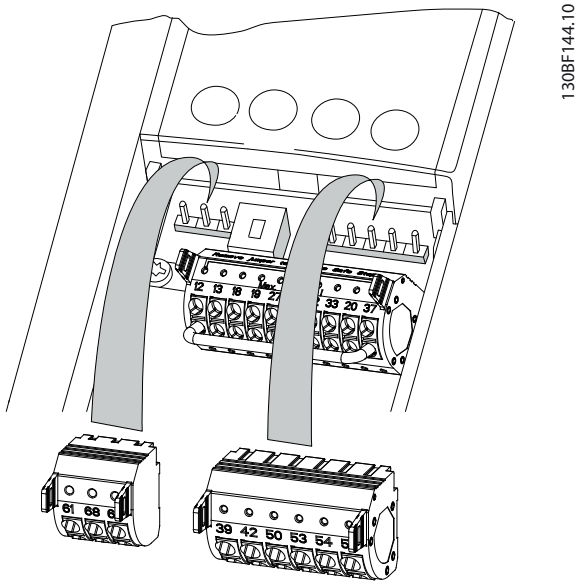

Illustration 10.6 Control Terminal Locations

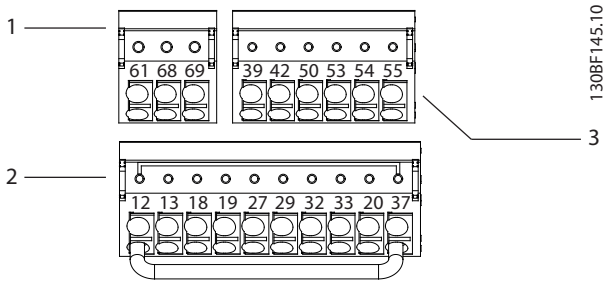

1	Serial communication terminals
2	Digital input/output terminals
3	Analog input/output terminals

Illustration 10.7 Terminal Numbers Located on the Connectors

10.4.2 Control Terminals

Illustration 10.6 shows the removable drive connectors. Terminal functions and default settings are summarized in *Table 10.5 – Table 10.7*.

Terminal	Parameter	Default setting	Description
61	–	–	Integrated RC-filter to connect cable shield if there are EMC problems.
68 (+)	*Parameter group 8-3* FC Port Settings*	–	RS485 interface. A switch (BUS TER.) is provided on the control card for bus termination resistance.
69 (-)	*Parameter group 8-3* FC Port Settings*	–	

Table 10.5 Serial Communication Terminal Descriptions

 Danfoss A/S © 01/2018 All rights reserved.

Terminal	Parameter	Default setting	Description
12, 13	–	+24 V DC	24 V DC supply voltage for digital inputs and external transducers. Maximum output current 200 mA for all 24 V loads.
18	*Parameter 5-10 Terminal 18 Digital Input*	*[8] Start*	Digital inputs.
19	*Parameter 5-11 Terminal 19 Digital Input*	*[10] Reversing*	
32	*Parameter 5-14 Terminal 32 Digital Input*	*[0] No operation*	
33	*Parameter 5-15 Terminal 33 Digital Input*	*[0] No operation*	
27	*Parameter 5-12 Terminal 27 Digital Input*	*[2] Coast inverse*	For digital input or output. Default setting is input.
29	*Parameter 5-13 Terminal 29 Digital Input*	*[14] JOG*	
20	–	–	Common for digital inputs and 0 V potential for 24 V supply.
37	–	STO	When not using the optional STO feature, a jumper wire is required between terminal 12 (or 13) and terminal 37. This set-up allows the drive to operate with factory default programming values.

Table 10.6 Digital Input/Output Terminal Descriptions

Terminal	Parameter	Default setting	Description
39	–	–	Common for analog output.
42	*Parameter 6-50 Terminal 42 Output*	*[0] No operation*	Programmable analog output. 0–20 mA or 4–20 mA at a maximum of 500 Ω.

Terminal	Parameter	Default setting	Description
50	–	+10 V DC	10 V DC analog supply voltage for potentiometer or thermistor. 15 mA maximum.
53	*Parameter group 6-1* Analog Input 1*	Reference	Analog input. For voltage or current. Switches A53 and A54 select mA or V.
54	*Parameter group 6-2* Analog Input 2*	Feedback	
55	–	–	Common for analog input.

Table 10.7 Analog Input/Output Terminal Descriptions

Relay terminals

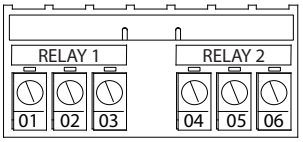

130BF156.10

Illustration 10.8 Relay 1 and Relay 2 Terminals

- Relay 1 and relay 2. Location depends on drive configuration. See the *operating guide*.
- Terminals on built-in optional equipment. See the instructions provided with the equipment option.

Terminal	Parameter	Default setting	Description
01, 02, 03	*Parameter 5-40 Function Relay* [0]	*[0] No operation*	Form C relay output. For AC or DC voltage and resistive or inductive loads.
04, 05, 06	*Parameter 5-40 Function Relay* [1]	*[0] No operation*	

Table 10.8 Relay Terminal Descriptions

 Danfoss A/S © 01/2018 All rights reserved.

10.5 Fuses and Circuit Breakers

Fuses ensure that possible damage to the drive is limited to damages inside the unit. To ensure compliance with EN 50178, use the recommended fuses as replacements. Use of fuses on the supply side is mandatory for IEC 60364 (CE) and NEC 2009 (UL) compliant installations.

D1h–D8h recommended fuses

Type aR fuses are recommended for enclosures D1h–D8h. See *Table 10.9*.

Model	380–500 V	525–690 V
N55K	–	ar-160
N75K	–	ar-315
N90K	ar-315	ar-315
N110	ar-350	ar-315
N132	ar-400	ar-315
N160	ar-500	ar-550
N200	ar-630	ar-550
N250	ar-800	ar-550
N315	–	ar-550

Table 10.9 D1h–D8h Power/semiconductor Fuse Sizes

Model	Fuse Options							
	Bussman	Littelfuse	Littelfuse	Bussmann	Siba	Ferraz-Shawmut	Ferraz-Shawmut (Europe)	Ferraz-Shawmut (North America)
N90K	170M2619	LA50QS300-4	L50S-300	FWH-300A	20 189 20.315	A50QS300-4	6,9URD31D08A0315	A070URD31KI0315
N110	170M2620	LA50QS350-4	L50S-350	FWH-350A	20 189 20.350	A50QS350-4	6,9URD31D08A0350	A070URD31KI0350
N132	170M2621	LA50QS400-4	L50S-400	FWH-400A	20 189 20.400	A50QS400-4	6,9URD31D08A0400	A070URD31KI0400
N160	170M4015	LA50QS500-4	L50S-500	FWH-500A	20 610 31.550	A50QS500-4	6,9URD31D08A0550	A070URD31KI0550
N200	170M4016	LA50QS600-4	L50S-600	FWH-600A	20 610 31.630	A50QS600-4	6,9URD31D08A0630	A070URD31KI0630
N250	170M4017	LA50QS800-4	L50S-800	FWH-800A	20 610 31.800	A50QS800-4	6,9URD32D08A0800	A070URD31KI0800

Table 10.10 D1h–D8h Power/semiconductor Fuse Options, 380–500 V

Model	Bussmann	Siba	Ferraz-Shawmut European	Ferraz-Shawmut North American
N55K	170M2616	20 610 31.160	6,9URD30D08A0160	A070URD30KI0160
N75K	170M2619	20 610 31.315	6,9URD31D08A0315	A070URD31KI0315
N90K	170M2619	20 610 31.315	6,9URD31D08A0315	A070URD31KI0315
N110	170M2619	20 610 31.315	6,9URD31D08A0315	A070URD31KI0315
N132	170M2619	20 610 31.315	6,9URD31D08A0315	A070URD31KI0315
N160	170M4015	20 620 31.550	6,9URD32D08A0550	A070URD32KI0550
N200	170M4015	20 620 31.550	6,9URD32D08A0550	A070URD32KI0550
N250	170M4015	20 620 31.550	6,9URD32D08A0550	A070URD32KI0550
N315	170M4015	20 620 31.550	6,9URD32D08A0550	A070URD32KI0550

Table 10.11 D1h–D8h Power/semiconductor Fuse Options, 525–690 V

Bussmann	Rating
LPJ-21/2SP	2.5 A, 600 V

Table 10.12 D1h–D8h Space Heater Fuse Recommendation

If the drive is not supplied with a mains disconnect, contactor, or circuit breaker, the Short Circuit Current Rating (SCCR) of the drives is 100000 A at all voltages (380–690 V).

If the drive is supplied with a mains disconnect, the SCCR of the drive is 100000 amps at all voltages (380–690 V).

If the drive is supplied with a circuit breaker, the SCCR depends on the voltage. See *Table 10.13*.

 Danfoss A/S © 01/2018 All rights reserved.

Enclosure	415 V	480 V	600 V	690 V
D6h	120000 A	100000 A	65000 A	70000 A
D8h	100000 A	100000 A	42000 A	30000 A

Table 10.13 D6h and D8h Supplied with a Circuit Breaker

If the drive is supplied with a contactor-only option and is externally fused according to *Table 10.14*, the SCCR of the drive is as follows:

Enclosure	415 V IEC[1)]	480 V UL[2)]	600 V UL[2)]	690 V IEC[1)]
D6h	100000 A	100000 A	100000 A	100000 A
D8h (not including the N250 T5 model)	100000 A	100000 A	100000 A	100000 A
D8h (N250 T5 model only)	100000 A	Consult factory	Not applicable	Not applicable

Table 10.14 D6h and D8h Supplied with a Contactor

[1)] With a Bussmann type LPJ-SP or Gould Shawmut type AJT fuse. 450 A maximum fuse size for D6h and 900 A maximum fuse size for D8h.

[2)] Must use Class J or L branch fuses for UL approval. 450 A maximum fuse size for D6h and 600 A maximum fuse size for D8h.

E1h–E4h recommended fuses

The fuses listed in *Table 10.15* are suitable for use on a circuit capable of delivering 100000 A_{rms} (symmetrical), depending on the drive voltage rating. With the proper fusing, the drive short circuit current rating (SCCR) is 100000 A_{rms}. E1h and E2h drives are supplied with internal drive fusing to meet the 100 kA SCCR and to comply with UL 61800-5-1 enclosed drive requirements. E3h and E4h drives must be fitted with Type aR fuses to meet the 100 kA SCCR.

Input voltage (V)	Bussmann ordering number
380–500	170M7309
525–690	170M7342

Table 10.15 E1h–E4h Fuse Options

Bussmann	Rating
LPJ-21/2SP	2.5 A, 600 V

Table 10.16 E1h–E2h Space Heater Fuse Recommendation

NOTICE

DISCONNECT SWITCH

All units ordered and supplied with a factory-installed disconnect switch require Class L branch circuit fusing to meet the 100 kA SCCR for the drive. If a circuit breaker is used, the SCCR rating is 42 kA. The input voltage and power rating of the drive determines the specific Class L fuse. The input voltage and power rating is found on the product nameplate. For more information regarding the nameplate, see the *operating guide*.

Input voltage (V)	Power rating [kW (hp)]	Short circuit rating (A)	Required protection
380–500	315–400 (450–550)	42000	Circuit breaker
		100000	Class L fuse, 800 A
380–500	450–500 (600–650)	42000	Circuit breaker
		100000	Class L fuse, 1200 A
525–690	355–560 (400–600)	40000	Circuit breaker
		100000	Class L fuse, 800 A
525–690	630–710 (650–750)	42000	Circuit breaker
		100000	Class L fuse, 1200 A

 Danfoss A/S © 01/2018 All rights reserved.

10.6 Motor

Any 3-phase asynchronous standard motor can be used with a drive.

Terminal	Function
96	U/T1
97	V/T2
98	W/T3
99	Ground

Table 10.17 Motor Cable Terminals Providing Clockwise Rotation (Factory Default)

The direction of rotation can be changed by switching 2 phases in the motor cable, or by changing the setting of *parameter 4-10 Motor Speed Direction*.

Motor rotation check can be performed using *parameter 1-28 Motor Rotation Check* and following the configuration shown in *Illustration 10.9*.

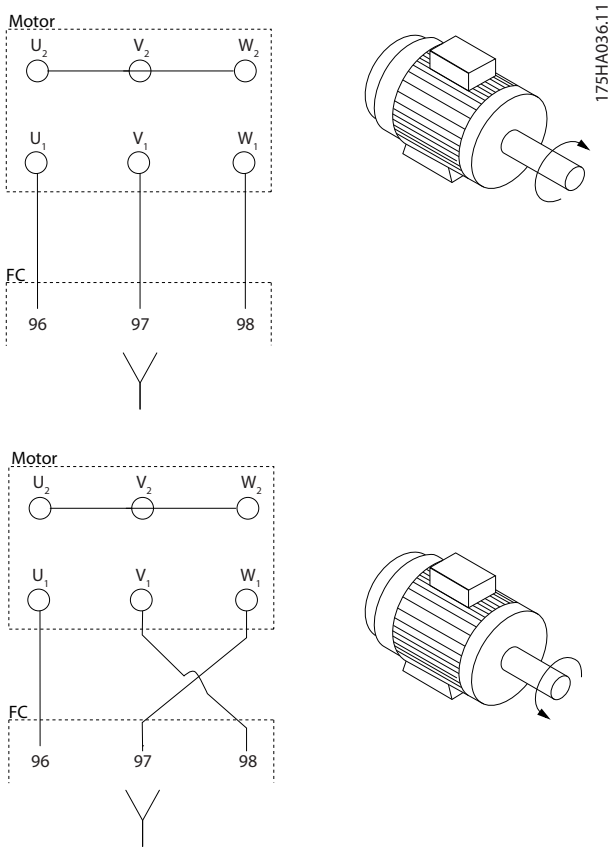

Illustration 10.9 Changing Motor Rotation

10.6.1 Motor Thermal Protection

The electronic thermal relay in the drive has received UL approval for single motor overload protection, when *parameter 1-90 Motor Thermal Protection* is set for *ETR Trip* and *parameter 1-24 Motor Current* is set to the rated motor current (see the motor nameplate).
For motor thermal protection, it is also possible to use the VLT® PTC Thermistor Card MCB 112 option. This card provides ATEX certification to protect motors in explosion hazardous areas Zone 1/21 and Zone 2/22. When *parameter 1-90 Motor Thermal Protection*, set to *[20] ATEX ETR*, is combined with the use of MCB 112, it is possible to control an Ex-e motor in explosion hazardous areas. Consult the *programming guide* for details on how to set up the drive for safe operation of Ex-e motors.

10.6.2 Parallel Connection of Motors

The drive can control several parallel-connected motors. For different configurations of parallel-connected motors, see *Illustration 10.10*.

When using parallel motor connection, observe the following points:

- Run applications with parallel motors in U/F mode (volts per hertz).
- VVC+ mode can be used in some applications.
- Total current consumption of motors must not exceed the rated output current I_{INV} for the drive.
- Problems can occur at start and at low RPM if motor sizes are widely different because the relatively high ohmic resistance in the stator of a small motor demands a higher voltage at start and at low RPM.
- The electronic thermal relay (ETR) of the drive cannot be used as motor overload protection. Provide further motor overload protection by including thermistors in each motor winding or individual thermal relays.
- When motors are connected in parallel, *parameter 1-02 Flux Motor Feedback Source* cannot be used, and *parameter 1-01 Motor Control Principle* must be set to *[0] U/f*.

 Danfoss A/S © 01/2018 All rights reserved.

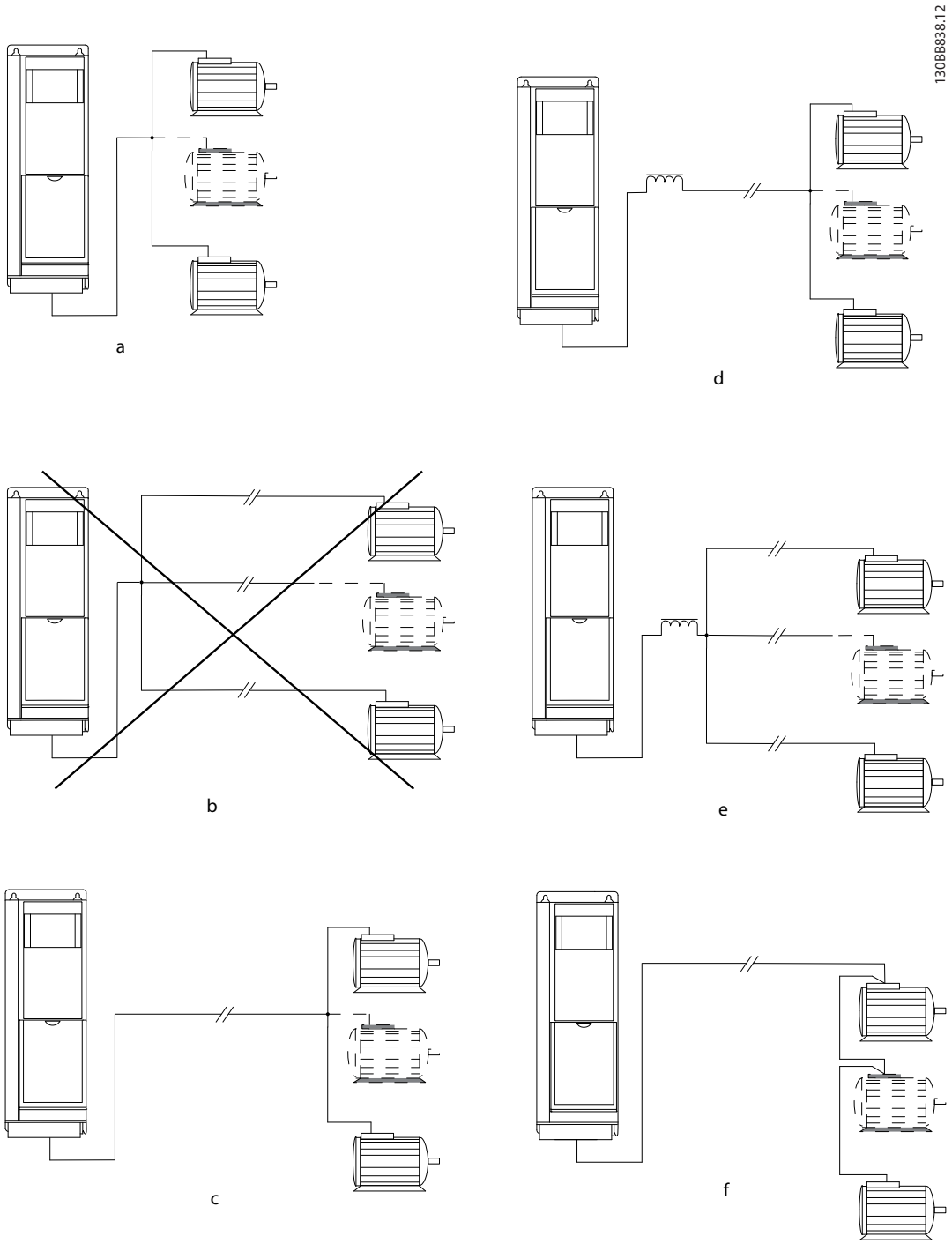

A	Installations with cables connected in a common joint as shown in A and B are only recommended for short cable lengths.
B	Be aware of the maximum motor cable length specified in *chapter 7.6 Cable Specifications*.
C	The total motor cable length specified in *chapter 7.6 Cable Specifications* is valid as long as the parallel cables are kept short less than 10 m (32 ft) each.
D	Consider voltage drop across the motor cables.
E	Consider voltage drop across the motor cables.
F	The total motor cable length specified in *chapter 7.6 Cable Specifications* is valid as long as the parallel cables are kept less than 10 m (32 ft) each.

Illustration 10.10 Different Parallel Connections of Motors

 Danfoss A/S © 01/2018 All rights reserved.

10.6.3 Motor Insulation

For motor cable lengths that are less than or equal to the maximum cable length listed in *chapter 7.6 Cable Specifications*, use the motor insulation ratings shown in *Table 10.18*. If a motor has lower insulation rating, Danfoss recommends using a dU/dt or sine-wave filter.

Nominal mains voltage	Motor insulation
$U_N \leq 420$ V	Standard U_{LL}=1300 V
420 V<$U_N \leq 500$ V	Reinforced U_{LL}=1600 V
500 V<$U_N \leq 600$ V	Reinforced U_{LL}=1800 V
600 V<$U_N \leq 690$ V	Reinforced U_{LL}=2000 V

Table 10.18 Motor Insulation Ratings

10.6.4 Motor Bearing Currents

To eliminate circulating bearing currents in all motors installed with the drive, install NDE (non-drive end) insulated bearings. To minimize DE (drive end) bearing and shaft currents, ensure proper grounding of the drive, motor, driven machine, and motor to the driven machine.

Standard mitigation strategies:

- Use an insulated bearing.
- Follow proper installation procedures.
  - Ensure that the motor and load motor are aligned.
  - Follow the EMC Installation guideline.
  - Reinforce the PE so the high frequency impedance is lower in the PE than the input power leads.
  - Provide a good high frequency connection between the motor and the drive. Use a shielded cable that has a 360° connection in the motor and the drive.
  - Ensure that the impedance from the drive to building ground is lower than the grounding impedance of the machine. This procedure can be difficult for pumps.
  - Make a direct ground connection between the motor and load motor.
- Lower the IGBT switching frequency.
- Modify the inverter waveform, 60° AVM vs. SFAVM.
- Install a shaft grounding system or use an isolating coupling.
- Apply conductive lubrication.
- Use minimum speed settings if possible.
- Try to ensure that the mains voltage is balanced to ground. This procedure can be difficult for IT, TT, TN-CS, or grounded leg systems.
- Use a dU/dt or sine-wave filter.

10.7 Braking

10.7.1 Brake Resistor Selection

To handle the higher demands of resistor braking, a brake resistor is necessary. The brake resistor absorbs the energy instead of the drive. For more information, see the *VLT® Brake Resistor MCE 101 Design Guide*.

If the amount of kinetic energy transferred to the resistor in each braking period is not known, the average power can be calculated based on the cycle time and braking time (intermittent duty cycle). The resistor intermittent duty cycle indicates the duty cycle at which the resistor is active. *Illustration 10.11* shows a typical braking cycle.

Motor suppliers often use S5 when stating the allowed load, which is an expression of intermittent duty cycle. The intermittent duty cycle for the resistor is calculated as follows:

Duty cycle=t_b/T

T=cycle time in s
t_b is the braking time in s (of the cycle time)

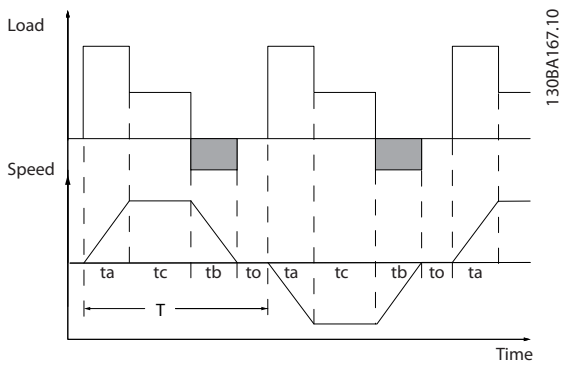

Illustration 10.11 Typical Braking Cycle

10

 Danfoss A/S © 01/2018 All rights reserved.

	Model					
	N90K	N110	N132	N160	N200	N250
Cycle time (s)	600	600	600	600	600	600
Braking duty cycle at 100% torque	Continuous	Continuous	Continuous	Continuous	Continuous	Continuous
Braking duty cycle at 150/160% torque	10%	10%	10%	10%	10%	10%

Table 10.19 D1h–D8h Braking Capability, 380–500 V

		Model				
		N315	N355	N400	N450	N500
Nominal braking [45 °C (113 °F)]	Cycle time (s)	600	600	600	600	600
	Current (%)	100	70	62	56	80
	Braking time (s)	240	240	240	240	240
Overload braking [45 °C (113 °F)]	Cycle time (s)	300	300	300	300	300
	Current (%)	136	92	81	72	107
	Braking time (s)	30	30	30	30	30
Nominal braking [25 °C (77 °F)]	Cycle time (s)	600	600	600	600	600
	Current (%)	100	92	81	89	80
	Braking time (s)	240	240	240	240	240
Overload braking [25 °C (77 °F)]	Cycle time (s)	300	300	300	300	300
	Current (%)	136	113	100	72	107
	Braking time (s)	30	10	10	30	30

Table 10.20 E1h–E4h Braking Capability, 380–500 V

	Model								
	N55K	N75K	N90K	N110	N132	N160	N200	N250	N315
Cycle time (s)	600	600	600	600	600	600	600	600	600
Braking duty cycle at 100% torque	40	40	40	40	40	40	40	40	40
Braking duty cycle at 150/160% torque	10	10	10	10	10	10	10	10	10

Table 10.21 D1h–D8h Braking Capability, 525–690 V

		Model					
		N355	N400	N500	N560	N630	N710
Nominal braking [45 °C (113 °F)]	Cycle time (s)	600	600	600	600	600	600
	Current (%)	89	79	63	63	71	63
	Braking time (s)	240	240	240	240	240	240
Overload braking [45 °C (113 °F)]	Cycle time (s)	300	300	300	300	300	300
	Current (%)	113	100	80	80	94	84
	Braking time (s)	30	30	30	30	30	30
Nominal braking [25 °C (77 °F)]	Cycle time (s)	600	600	600	600	600	60
	Current (%)	89	79	63	63	71	63
	Braking time (s)	240	240	240	240	240	240
Overload braking [25 °C (77 °F)]	Cycle time (s)	300	300	300	300	300	300
	Current (%)	113	100	80	80	94	84
	Braking time (s)	30	30	30	30	30	30

Table 10.22 E1h–E4h Braking Capability, 525–690 V

 Danfoss A/S © 01/2018 All rights reserved.

Danfoss offers brake resistors with duty cycle of 5%, 10%, and 40%. If a 10% duty cycle is applied, the brake resistors are able to absorb brake power for 10% of the cycle time. The remaining 90% of the cycle time is used to dissipate excess heat.

NOTICE

Make sure that the resistor is designed to handle the required braking time.

The maximum allowed load on the brake resistor is stated as a peak power at a given intermittent duty cycle. The brake resistance is calculated as shown:

$$R_{br}\,[\Omega] = \frac{U_{dc}^2}{P_{peak}}$$

where

$P_{peak}=P_{motor} \times M_{br}\,[\%] \times \eta_{motor} \times \eta_{VLT}[W]$

As can be seen, the brake resistance depends on the DC-link voltage (U_{dc}).

Voltage	Brake active	Warning before cut out	Cut out (trip)
380–500 V[1)]	810 V	828 V	855 V
525–690 V	1084 V	1109 V	1130 V

Table 10.23 FC 302 Brake Limits

1) Power size dependent

NOTICE

Check that the brake resistor can handle a voltage of 410 V, 820 V, 850 V, 975 V, or 1130 V. Danfoss brake resistors are rated for use on all Danfoss drives.

Danfoss recommends the brake resistance R_{rec}. This calculation guarantees that the drive is able to brake at the highest braking torque ($M_{br(\%)}$) of 150%. The formula can be written as:

$$R_{rec}\,[\Omega] = \frac{U_{dc}^2\, x\, 100}{P_{motor}\, x\, M_{br\,(\%)}\, x \eta_{VLT}\, x\, \eta_{motor}}$$

η_{motor} is typically at 0.90

η_{VLT} is typically at 0.98

For 200 V, 480 V, 500 V, and 600 V drives, R_{rec} at 160% braking torque is written as:

$$200V : R_{rec} = \frac{107780}{P_{motor}}\,[\Omega]$$

$$500V : R_{rec} = \frac{464923}{P_{motor}}\,[\Omega]$$

$$600V : R_{rec} = \frac{630137}{P_{motor}}\,[\Omega]$$

$$690V : R_{rec} = \frac{832664}{P_{motor}}\,[\Omega]$$

NOTICE

The resistor brake circuit resistance selected should not be higher than what is recommended by Danfoss. Enclosure sizes E1h–E4h contain 1 brake chopper.

NOTICE

If a short circuit occurs in the brake transistor, or a ground fault occurs in the brake module or wiring, power dissipation in the brake resistor is prevented only by using a mains switch or contactor to disconnect the mains from the drive, or a contact in the brake circuit. Uninterrupted power dissipation in the brake resistor can cause overheating, damage, or a fire.

⚠WARNING

FIRE HAZARD

Brake resistors get hot while/after braking. Failure to properly place brake resistor in a secure location can result in serious injury or property damage.

- **Place brake resistor in a secure environment away from flammable objects and accidental contact.**

10

10.7.2 Control with Brake Function

A relay/digital output can be used to protect the brake resistor against overloading or overheating by generating a fault in the drive. If the brake IGBT is overloaded or overheated, the relay/digital signal from the brake to the drive turns off the brake IGBT. This relay/digital signal does not protect against a short circuit in the brake IGBT or a ground fault in the brake module or wiring. If a short circuit occurs in the brake IGBT, Danfoss recommends a means to disconnect the brake.

In addition, the brake makes it possible to read out the momentary power and the average power for the latest 120 s. The brake can monitor the power energizing and make sure that it does not exceed the limit selected in *parameter 2-12 Brake Power Limit (kW)*. *Parameter 2-13 Brake Power Monitoring* selects what function occurs when the power transmitted to the brake resistor exceeds the limit set in *parameter 2-12 Brake Power Limit (kW)*.

 Danfoss A/S © 01/2018 All rights reserved.

NOTICE

Monitoring the brake power is not a safety function; a thermal switch connected to an external contactor is required for that purpose. The brake resistor circuit is not ground leakage protected.

Overvoltage control (OVC) can be selected as an alternative brake function in *parameter 2-17 Over-voltage Control*. This function is active for all units and ensures that if the DC-link voltage increases, the output frequency also increases to limit the voltage from the DC link, which avoids a trip.

NOTICE

OVC cannot be activated when running a PM motor, while *parameter 1-10 Motor Construction* is set to *[1] PM non-salient SPM*.

10.8 Residual Current Devices (RCD) and Insulation Resistance Monitor (IRM)

Use RCD relays, multiple protective grounding, or grounding as extra protection, provided they comply with local safety regulations.
If a ground fault appears, a DC current can develop in the faulty current. If RCD relays are used, local regulations must be observed. Relays must be suitable for protection of 3-phase equipment with a bridge rectifier and for a brief discharge on power-up. See *chapter 10.9 Leakage Current* for more details.

10.9 Leakage Current

Follow national and local codes regarding protective grounding of equipment where leakage current exceeds 3.5 mA.
Drive technology implies high-frequency switching at high power. This high-frequency switching generates a leakage current in the ground connection.

The ground leakage current is made up of several contributions and depends on various system configurations, including:

- RFI filtering.
- Motor cable length.
- Motor cable shielding.
- Drive power.

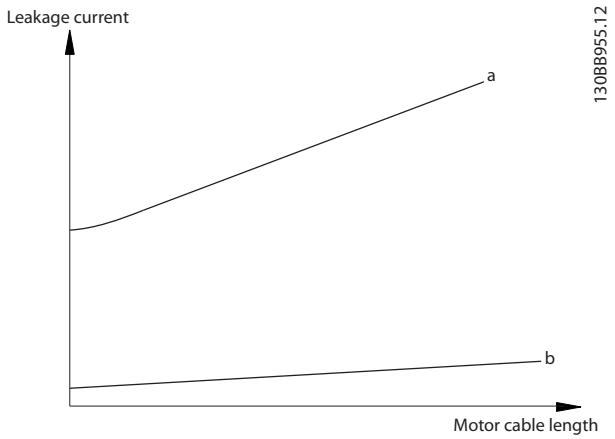

Illustration 10.12 Motor cable length and power size influence the leakage current. Power size a > power size b.

The leakage current also depends on the line distortion.

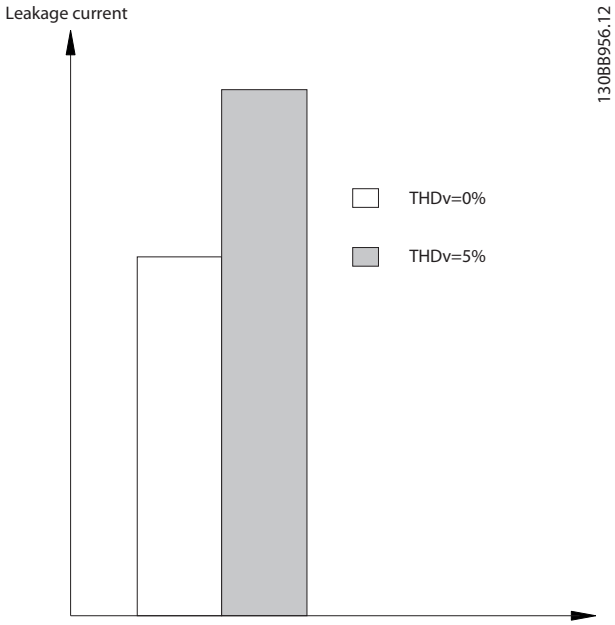

Illustration 10.13 Line Distortion Influences Leakage Current

If the leakage current exceeds 3.5 mA, compliance with EN/IEC61800-5-1 (power drive system product standard) requires special care.

Reinforce grounding with the following protective ground connection requirements:

- Ground wire (terminal 95) of at least 10 mm^2 (8 AWG) cross-section.
- 2 separate ground wires both complying with the dimensioning rules.

See EN/IEC61800-5-1 and EN 50178 for further information.

 Danfoss A/S © 01/2018 All rights reserved.

Using RCDs

Where residual current devices (RCDs), also known as ground leakage circuit breakers, are used, comply with the following:

- Use RCDs of type B only as they can detect AC and DC currents.
- Use RCDs with a delay to prevent faults due to transient ground currents.
- Dimension RCDs according to the system configuration and environmental considerations.

The leakage current includes several frequencies originating from both the mains frequency and the switching frequency. Whether the switching frequency is detected depends on the type of RCD used.

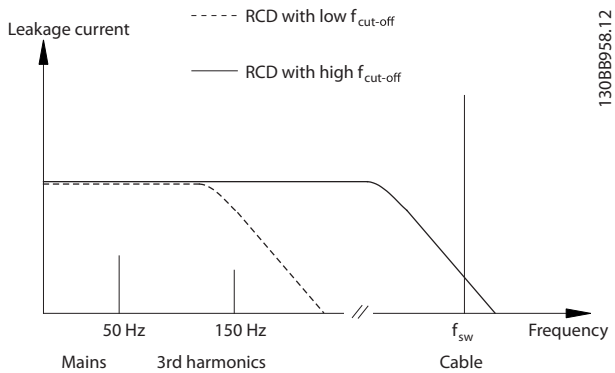

Illustration 10.14 Main Contributions to Leakage Current

The amount of leakage current detected by the RCD depends on the cut-off frequency of the RCD.

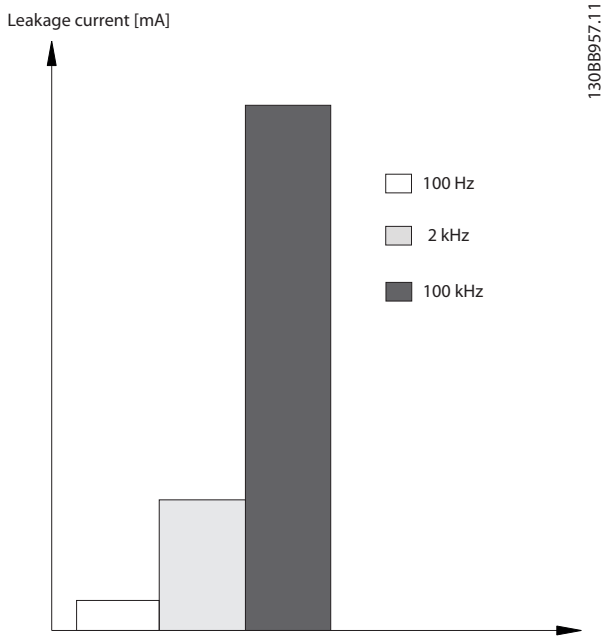

Illustration 10.15 Influence of the RCD Cut-off Frequency on Leakage Current

10.10 IT Mains

Mains supply isolated from ground

If the drive is supplied from an isolated mains source (IT mains, floating delta, or grounded delta) or TT/TN-S mains with grounded leg, the RFI switch is recommended to be turned off via *parameter 14-50 RFI Filter* on the drive and *parameter 14-50 RFI Filter* on the filter. For more detail, see IEC 364-3. In the off position, the filter capacitors between the chassis and the DC link are cut off to avoid damage to the DC link and to reduce the ground capacity currents, according to IEC 61800-3.

If optimum EMC performance is needed, or parallel motors are connected, or the motor cable length is above 25 m (82 ft), Danfoss recommends setting *parameter 14-50 RFI Filter* to [ON]. Refer also to the *Application Note, VLT on IT Mains*. It is important to use isolation monitors that are rated for use together with power electronics (IEC 61557-8).

Danfoss does not recommend using an output contactor for 525–690 V drives connected to an IT mains network.

10.11 Efficiency

Efficiency of the drive (η_{VLT})

The load on the drive has little effect on its efficiency. In general, the efficiency is the same at the rated motor frequency $f_{M,N}$, whether the motor supplies 100% of the rated shaft torque or only 75%, in case of part loads.

The efficiency of the drive does not change even if other U/f characteristics are selected. However, the U/f characteristics influence the efficiency of the motor.

The efficiency declines slightly when the switching frequency is set to a value of above 5 kHz. The efficiency is slightly reduced when the mains voltage is 480 V, or if the motor cable is longer than 30 m (98 ft).

Drive efficiency calculation

Calculate the efficiency of the drive at different speeds and loads based on *Illustration 10.16*. The factor in this graph must be multiplied by the specific efficiency factor listed in the specification tables in *chapter 7.1 Electrical Data, 380–500 V* and *chapter 7.2 Electrical Data, 525–690 V*.

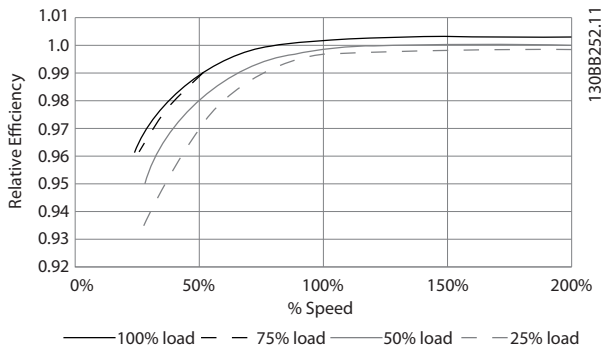

Illustration 10.16 Typical Efficiency Curves

10

 Danfoss A/S © 01/2018 All rights reserved.

Example: Assume a 160 kW, 380–480/500 V AC drive at 25% load at 50% speed. *Illustration 10.16* shows 0.97 - rated efficiency for a 160 kW drive is 0.98. The actual efficiency is then: 0.97x 0.98=0.95.

Efficiency of the motor (η_{MOTOR})
The efficiency of a motor connected to the drive depends on magnetizing level. In general, the efficiency is as good as with mains operation. The efficiency of the motor depends on the type of motor.

In the range of 75–100% of the rated torque, the efficiency of the motor is practically constant, both when the drive controls it and when it runs directly on the mains.

In small motors, the influence from the U/f characteristic on efficiency is marginal. However, in motors from 11 kW (15 hp) and up, the advantages are significant.

Typically the switching frequency does not affect the efficiency of small motors. Motors from 11 kW (15 hp) and up have their efficiency improved (1–2%) because the shape of the motor current sine-wave is almost perfect at high switching frequency.

Efficiency of the system (η_{SYSTEM})
To calculate system efficiency, the efficiency of the drive (η_{VLT}) is multiplied by the efficiency of the motor (η_{MOTOR}): $\eta_{SYSTEM}=\eta_{VLT} \times \eta_{MOTOR}$

10.12 Acoustic Noise

The acoustic noise from the drive comes from 3 sources:

- DC intermediate circuit coils.
- Internal fans.
- RFI filter choke.

Table 10.24 lists the typical acoustic noise values measured at a distance of 1 m (9 ft) from the unit.

Enclosure size	dBA at full fan speed
D1h/D3h/D5h/D6h	73
D2h/D4h/D7h/D8h	75
E1h–E4h	80

Table 10.24 Acoustic Noise

Test results performed according to ISO 3744 for audible noise magnitude in a controlled environment. Noise tone has been quantified for engineering data record of hardware performance per ISO 1996-2 Annex D.

A new fan control algorithm for E1h-E4h enlosure sizes helps improve audible noise performance by allowing the operator to select different fan operation modes based on specific conditions. For more information, see *parameter 30-50 Heat Sink Fan Mode*.

10.13 dU/dt Conditions

NOTICE

To avoid the premature aging of motors that are not designed to be used with drives, such as those motors without phase insulation paper or other insulation reinforcement, Danfoss strongly recommends a dU/dt filter or a sine-wave filter fitted on the output of the drive. For further information about dU/dt and sine-wave filters, see the *Output Filters Design Guide*.

When a transistor in the inverter bridge switches, the voltage across the motor increases by a dU/dt ratio depending on the motor cable (type, cross-section, length shielded or unshielded) and the inductance.

The natural induction causes an overshoot U_{PEAK} in the motor voltage before it stabilizes itself at a level depending on the voltage in the intermediate circuit. The rise time and the peak voltage U_{PEAK} affect the service life of the motor. In particular, motors without phase coil insulation are affected if the peak voltage is too high. Motor cable length affects the rise time and peak voltage. If the motor cable is short (a few meters), the rise time and peak voltage are lower. If the motor cable is long (100 m (328 ft)), the rise time and peak voltage are higher.

Peak voltage on the motor terminals is caused by the switching of the IGBTs. The drive complies with the demands of IEC 60034-25:2007 edition 2.0 regarding motors designed to be controlled by drives. The drive also complies with IEC 60034-17:2006 edition 4 regarding Norm motors controlled by drives.

High-power range
The power sizes in *Table 10.25* to *Table 10.36* at the appropriate mains voltages comply with the requirements of IEC 60034-17:2006 edition 4 regarding normal motors controlled by drives, IEC 60034-25:2007 edition 2.0 regarding motors designed to be controlled by drives, and NEMA MG 1-1998 Part 31.4.4.2 for inverter fed motors. The power sizes in *Table 10.25* to *Table 10.36* do not comply with NEMA MG 1-1998 Part 30.2.2.8 for general purpose motors.

 Danfoss A/S © 01/2018 All rights reserved.

10.13.1 dU/dt Test Results for Enclosures D1h–D8h

Test results for 380–500 V

Power size [kW (hp)]	Cable [m (ft)]	Mains voltage [V]	Rise time [µs]	Peak voltage [V]	dU/dt [V/µs]
90–132 (125–200)	30 (98)	500	0.26	1180	2109
	150 (492)	500	0.21	1423	3087
	300 (984)	500	0.56	1557	1032
160–250 (250–350)	30 (98)	500	0.63	1116	843
	150 (492)	500	0.80	1028	653
	300 (984)	500	0.71	835	651

Table 10.25 NEMA dU/dt Test Results for D1h–D8h with Unshielded Cables and No Output Filter, 380–500 V

Power size [kW (hp)]	Cable [m (ft)]	Mains voltage [V]	Rise time [µs]	Peak voltage [V]	dU/dt [V/µs]
90–132 (125–200)	30 (98)	500	0.71	1180	1339
	150 (492)	500	0.76	1423	1497
	300 (984)	500	0.91	1557	1370
160–250 (250–350)	30 (98)	500	1.10	1116	815
	150 (492)	500	2.53	1028	321
	300 (984)	500	1.29	835	517

Table 10.26 IEC dU/dt Test Results for D1h–D8h with Unshielded Cables and No Output Filter, 380–500 V

Power size [kW (hp)]	Cable [m (ft)]	Mains voltage [V]	Rise time [µs]	Peak voltage [V]	dU/dt [V/µs]
90–132 (125–200)	30 (98)	500	–	–	–
	150 (492)	500	0.28	1418	2105
	300 (984)	500	0.21	1530	2450
160–250 (250–350)	30 (98)	500	–	–	–
	150 (492)	500	0.23	1261	2465
	300 (984)	500	0.96	1278	597

Table 10.27 NEMA dU/dt Test Results for D1h–D8h with Shielded Cables and No Output Filter, 380–500 V

Power size [kW (hp)]	Cable [m (ft)]	Mains voltage [V]	Rise time [µs]	Peak voltage [V]	dU/dt [V/µs]
90–132 (125–200)	30 (98)	500	–	–	–
	150 (492)	500	0.66	1418	1725
	300 (984)	500	0.96	1530	1277
160–250 (250–350)	30 (98)	500	–	–	–
	150 (492)	500	0.56	1261	1820
	300 (984)	500	0.78	1278	1295

Table 10.28 IEC dU/dt Test Results for D1h–D8h with Shielded Cables and No Output Filter, 380–500 V

Test results for 525–690 V

NEMA does not provide dU/dt results for 690 V.

Power size [kW (hp)]	Cable [m (ft)]	Mains voltage [V]	Rise time [µs]	Peak voltage [V]	dU/dt [V/µs]
55–132 (60–150)	30 (98)	690	–	–	–
	150 (492)	690	1.11	2135	1535
	300 (984)	690	1.28	2304	1433
160–315 (200–350)	30 (98)	690	–	–	–
	150 (492)	690	0.42	996	1885
	300 (984)	690	1.38	2163	1253

Table 10.29 IEC dU/dt Test Results for D1h–D8h with Unshielded Cables and No Output Filter, 525–690 V

 Danfoss A/S © 01/2018 All rights reserved.

Power size [kW (hp)]	Cable [m (ft)]	Mains voltage [V]	Rise time [µs]	Peak voltage [V]	dU/dt [V/µs]
55–132 (60–150)	30 (98)	690	–	–	–
	150 (492)	690	1.03	2045	1590
	300 (984)	690	1.41	2132	1217
160–315 (200–350)	30 (98)	690	–	–	–
	150 (492)	690	1.00	2022	1617
	300 (984)	690	1.15	2097	1459

Table 10.30 IEC dU/dt Test Results for D1h–D8h with Shielded Cables and No Output Filter, 525–690 V

10.13.2 dU/dt Test Results for Enclosures E1h–E4h

Test results for 380–500 V

Power size [kW (hp)]	Cable [m (ft)]	Mains voltage [V]	Rise time [µs]	Peak voltage [V]	dU/dt [V/µs]
315–400 (450–550)	5 (16)	460	0.23	1038	2372
	30 (98)	460	0.72	1061	644
	150 (492)	460	0.46	1142	1160
	300 (984)	460	1.84	1244	283
450–500 (600–650)	5 (16)	460	0.42	1042	1295
	30 (98)	460	0.57	1200	820
	150 (492)	460	0.63	1110	844
	300 (984)	460	2.21	1175	239

Table 10.31 NEMA dU/dt Test Results for E1h–E4h with Unshielded Cables and No Output Filter, 380–500 V

Power size [kW (hp)]	Cable [m (ft)]	Mains voltage [V]	Rise time [µs]	Peak voltage [V]	dU/dt [V/µs]
315–400 (450–550)	5 (16)	460	0.33	1038	2556
	30 (98)	460	1.27	1061	668
	150 (492)	460	0.84	1142	1094
	300 (984)	460	2.25	1244	443
450–500 (600–650)	5 (16)	460	0.53	1042	1569
	30 (98)	460	1.22	1200	1436
	150 (492)	460	0.90	1110	993
	300 (984)	460	2.29	1175	411

Table 10.32 IEC dU/dt Test Results for E1h–E4h with Unshielded Cables and No Output Filter, 380–500 V

Power size [kW (hp)]	Cable [m (ft)]	Mains voltage [V]	Rise time [µs]	Peak voltage [V]	dU/dt [V/µs]
315–400 (450–550)	5 (16)	460	0.17	1017	3176
	30 (98)	460	–	–	–
	150 (492)	460	0.41	1268	1311
450–500 (600–650)	5 (16)	460	0.17	1042	3126
	30 (98)	460	–	–	–
	150 (492)	460	0.22	1233	2356

Table 10.33 NEMA dU/dt Test Results for E1h–E4h with Shielded Cables and No Output Filter, 380–500 V

Power size [kW (hp)]	Cable [m (ft)]	Mains voltage [V]	Rise time [µs]	Peak voltage [V]	dU/dt [V/µs]
315–400 (450–550)	5 (16)	460	0.26	1017	3128
	30 (98)	460	–	–	–
	150 (492)	460	0.70	1268	1448
450–500 (600–650)	5 (16)	460	0.27	1042	3132
	30 (98)	460	–	–	–
	150 (492)	460	0.52	1233	1897

Table 10.34 IEC dU/dt Test Results for E1h–E4h with Shielded Cables and No Output Filter, 380–500 V

 Danfoss A/S © 01/2018 All rights reserved.

Illustration 10.17–Illustration 10.20 show the typical rate of rise voltage and peak voltages at the motor terminals for both shielded and unshielded cables in various configurations.

These values are true to steady state operation and at RMS input voltage range of the drive V_{line}. When the drive operates in braking mode, the intermediate DC-link voltage increases by 20%. This effect is similar to increasing the mains voltage by 20%. Consider this voltage increase when performing motor insulation analysis for braking applications.

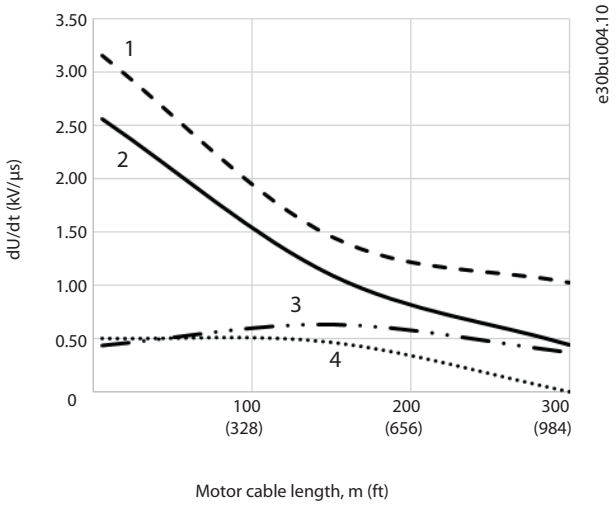

1	Unshielded cable with no filter
2	Shielded cable with no filter
3	Unshielded cable with dU/dt filter
4	Shielded cable with dU/dt filter

Illustration 10.17 dU/dt at Motor Terminals for Enclosures E1h/E3h, 380–500 V

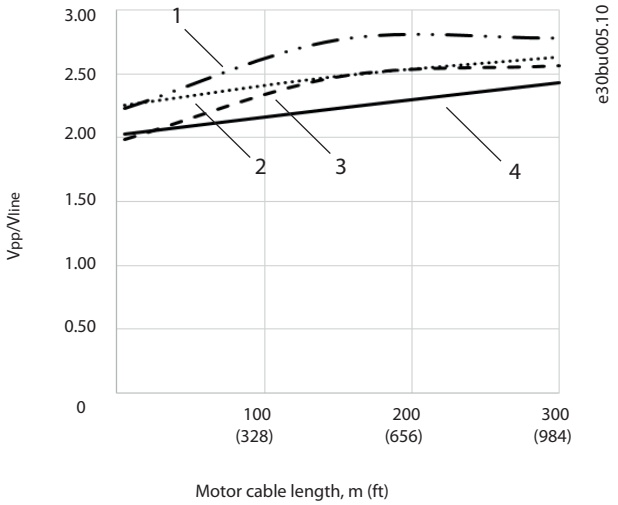

1	Unshielded cable with dU/dt filter
2	Shielded cable with dU/dt filter
3	Shielded cable with no filter
4	Unshielded cable with no filter

Illustration 10.18 Peak Voltages at Motor Terminals for Enclosures E1h/E3h, 380–500 V

 Danfoss A/S © 01/2018 All rights reserved.

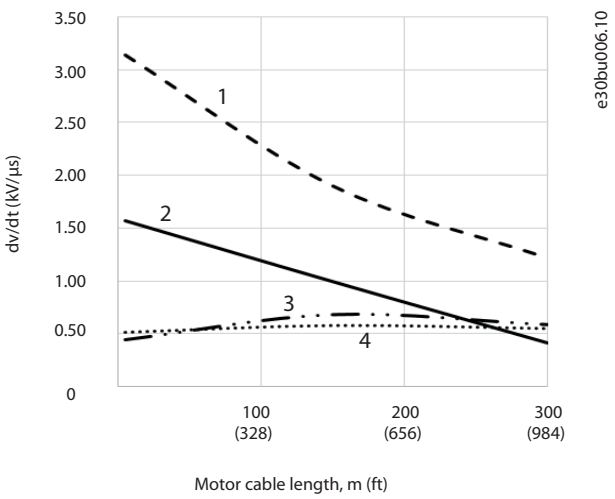

1	Shielded cable with no filter
2	Unshielded cable with no filter
3	Unshielded cable with dU/dt filter
4	Shielded cable with dU/dt filter

Illustration 10.19 Peak Voltages at Motor Terminals for Enclosures E2h/E4h, 380–500 V

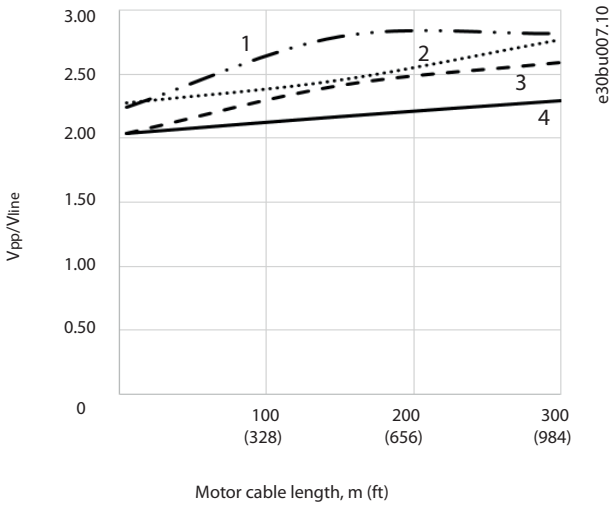

1	Unshielded cable with dU/dt filter
2	Shielded cable with dU/dt filter
3	Shielded cable with no filter
4	Unshielded cable with no filter

Illustration 10.20 Peak Voltages at Motor Terminals for Enclosures E2h/E4h, 380–500 V

10

Test results for 525–690 V

NEMA does not provide dU/dt results for 690 V.

Power size [kW (hp)]	Cable [m (ft)]	Mains voltage [V]	Rise time [µs]	Peak voltage [V]	dU/dt [V/µs]
355–560 (400–600)	30 (98)	690	0.37	1625	3494
	50 (164)	690	0.86	2030	1895
630–710 (650–750)	5 (16)	690	0.25	1212	3850
	20 (65)	690	0.33	1525	3712
	50 (164)	690	0.82	2040	1996

Table 10.35 IEC dU/dt Test Results for E1h–E4h with Unshielded Cables and No Output Filter, 525–690 V

Power size [kW (hp)]	Cable [m (ft)]	Mains voltage [V]	Rise time [µs]	Peak voltage [V]	dU/dt [V/µs]
355–560 (400–600)	5 (16)	690	0.23	1450	5217
	48 (157)	690	0.38	1637	3400
	150 (492)	690	0.94	1762	1502
630–710 (650–750)	5 (16)	690	0.26	1262	3894
	48 (157)	690	0.46	1625	2826
	150 (492)	690	0.94	1710	1455

Table 10.36 IEC dU/dt Test Results for E1h–E4h with Shielded Cables and No Output Filter, 525–690 V

Illustration 10.21–Illustration 10.24 show the typical rate of rise voltage and peak voltages at the motor terminals for both shielded and unshielded cables in various configurations.

These values are true to steady state operation and at RMS input voltage range of the drive V_{line}. When the drive operates in braking mode, the intermediate DC-link voltage increases by 20%. This effect is similar to increasing the mains voltage by 20%. Consider this voltage increase when performing motor insulation analysis for braking applications.

 Danfoss A/S © 01/2018 All rights reserved.

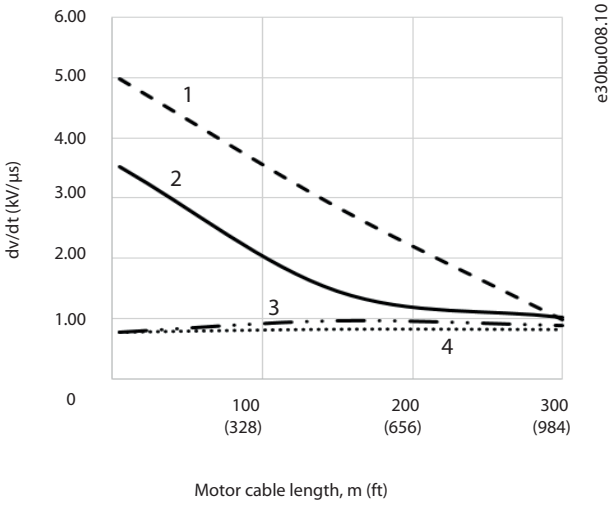

1	Unshielded cable with no filter
2	Shielded cable with no filter
3	Unshielded cable with dU/dt filter
4	Shielded cable with dU/dt filter

Illustration 10.21 dU/dt at Motor Terminals for Enclosures E2h/E4h, 525–690 V

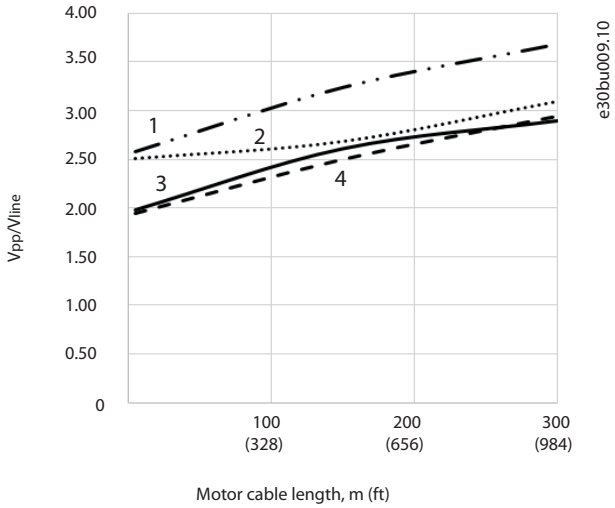

1	Unshielded cable with dU/dt filter
2	Shielded cable with dU/dt filter
3	Shielded cable with no filter
4	Unshielded cable with no filter

Illustration 10.22 Peak Voltages at Motor Terminals for Enclosures E2h/E4h, 525–690 V

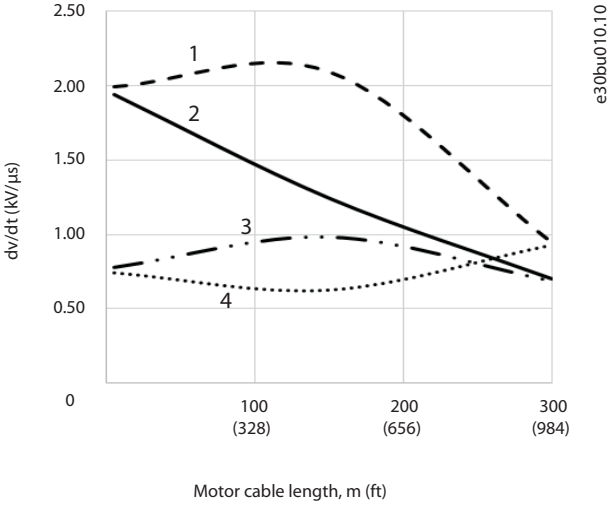

1	Shielded cable with no filter
2	Unshielded cable with no filter
3	Unshielded cable with dU/dt filter
4	Shielded cable with dU/dt filter

Illustration 10.23 Peak Voltages at Motor Terminals for Enclosures E2h/E4h, 525–690 V

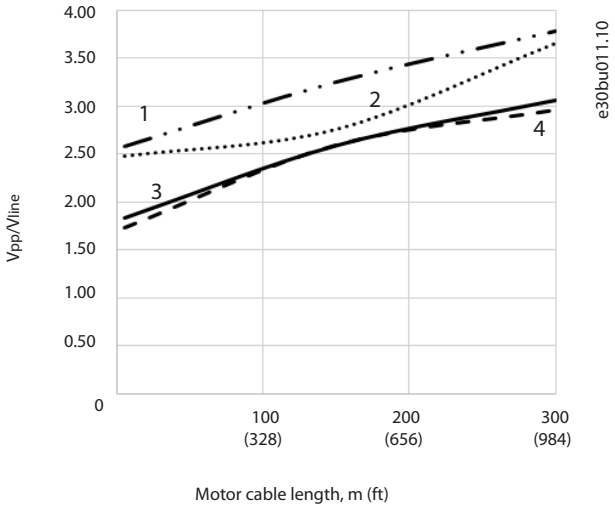

1	Unshielded cable with dU/dt filter
2	Shielded cable with dU/dt filter
3	Shielded cable with no filter
4	Unshielded cable with no filter

Illustration 10.24 Peak Voltages at Motor Terminals for Enclosures E2h/E4h, 525–690 V

 Danfoss A/S © 01/2018 All rights reserved.

10.14 Electromagnetic Compatibility (EMC) Overview

Electrical devices both generate interference and are affected by interference from other generated sources. The electromagnetic compatibility (EMC) of these effects depends on the power and the harmonic characteristics of the devices.

Uncontrolled interaction between electrical devices in a system can degrade compatibility and impair reliable operation. Interference takes the form of the following:

- Electrostatic discharges
- Rapid voltage fluctuations
- High-frequency interference

Electrical interference is most commonly found at frequencies in the range 150 kHz to 30 MHz. Airborne interference from the drive system in the range 30 MHz to 1 GHz is generated from the inverter, motor cable, and the motor.

Capacitive currents in the motor cable, coupled with a high dU/dt from the motor voltage, generate leakage currents. See *Illustration 10.25*. Shielded motor cables have higher capacitance between the phase wires and the shield, and again between the shield and ground. This added cable capacitance, along with other parasitic capacitance and motor inductance, changes the electromagnetic emission signature produced by the unit. The change in electromagnetic emission signature occurs mainly in emissions less than 5 MHz. Most of the leakage current (I1) is carried back to the unit through the PE (I3), leaving only a small electromagnetic field (I4) from the shielded motor cable. The shield reduces the radiated interference but increases the low-frequency interference on the mains.

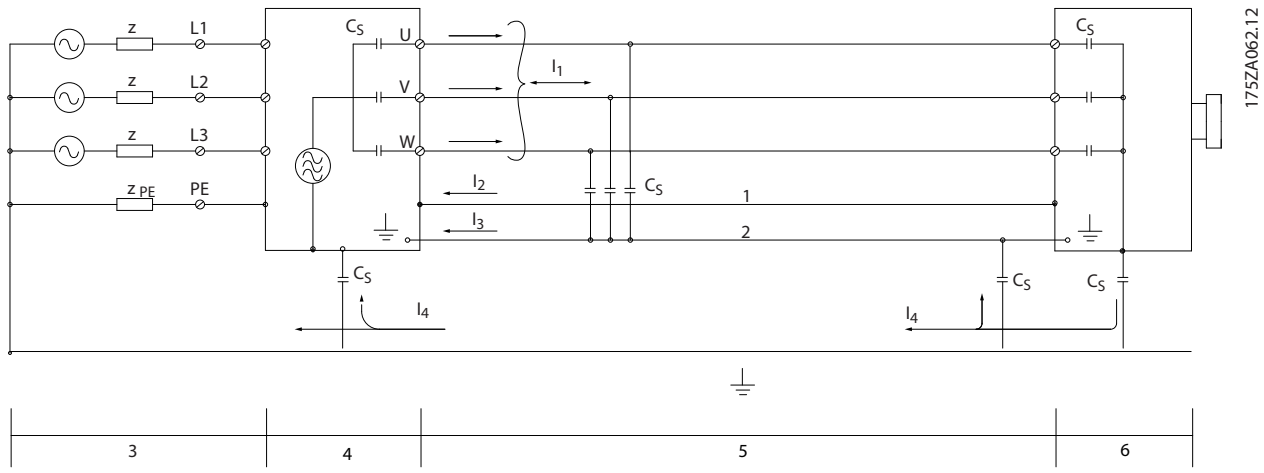

1	Ground wire	Cs	Possible shunt parasitic capacitance paths (varies with different installations)
2	Shield	I_1	Common-mode leakage current
3	AC mains supply	I_2	Shielded motor cable
4	Drive	I_3	Safety ground (4th conductor in motor cables)
5	Shielded motor cable	I_4	Unintended common-mode current
6	Motor	–	–

Illustration 10.25 Electric Model Showing Possible Leakage Currents

 Danfoss A/S © 01/2018 All rights reserved.

10.14.1 EMC Test Results

The following test results have been obtained using a drive (with options if relevant), a shielded control cable, a control box with potentiometer, a motor, and motor shielded cable.

RFI filter type		Conducted emission			Radiated emission		
Standards and requirements	**EN 55011**	**Class B** Housing, trades, and light industries	**Class A group 1** Industrial environment	**Class A group 2** Industrial environment	**Class B** Housing, trades, and light industries	**Class A group 1** Industrial environment	**Class A group 2** Industrial environment
	EN/IEC 61800-3	**Category C1** First environment Home and office	**Category C2** First environment Home and office	**Category C3** Second environment Industrial	**Category C1** First environment Home and office	**Category C2** First environment Home and office	**Category C3** First environment Home and office
H2							
FC 302	90–500 kW 380–500 V	No	No	150 m (492 ft)	No	No	Yes
	55–710 kW 525–690 V	No	No	150 m (492 ft)	No	No	Yes
H4							
FC 302	90–500 kW 380–500 V	No	150 m (492 ft)	150 m (492 ft)	No	Yes	Yes
	55–710 kW 525–690 V	–	–	–	–	–	–

Table 10.37 EMC Test Results (Emission and Immunity)

10

10.14.2 Emission Requirements

According to the EMC product standard for adjustable speed drives EN/IEC 61800-3:2004, the EMC requirements depend on the environment in which the drive is installed. These environments along with the mains voltage supply requirements are defined in *Table 10.38*.

The drives comply with EMC requirements described in IEC/EN 61800-3 (2004)+AM1 (2011), category C3, for equipment having greater than 100 A per-phase current draw, installed in the second environment. Compliance testing is performed with a 150 m (492 ft) shielded motor cable.

Category (EN 61800-3)	Definition	Conducted emission (EN 55011)
C1	First environment (home and office) with a supply voltage less than 1000 V.	Class B
C2	First environment (home and office) with a supply voltage less than 1000 V, which is not plug-in or movable and where a professional is intended to be used to install or commission the system.	Class A Group 1
C3	Second environment (industrial) with a supply voltage lower than 1000 V.	Class A Group 2
C4	Second environment with the following: • Supply voltage equal to or above 1000 V. • Rated current equal to or above 400 A. • Intended for use in complex systems.	No limit line. An EMC plan must be made.

Table 10.38 Emission Requirements

When the generic emission standards are used, the drives are required to comply with *Table 10.39*.

 Danfoss A/S © 01/2018 All rights reserved.

Environment	Generic standard	Conducted emission requirement according to EN 55011 limits
First environment (home and office)	EN/IEC 61000-6-3 Emission standard for residential, commercial, and light industrial environments.	Class B
Second environment (industrial environment)	EN/IEC 61000-6-4 Emission standard for industrial environments.	Class A Group 1

Table 10.39 Generic Emission Standard Limits

10.14.3 Immunity Requirements

The immunity requirements for drives depend on the installation environment. The requirements for the industrial environment are higher than the requirements for the home and office environment. All Danfoss drives comply with the requirements for both the industrial and the home/office environment.

To document immunity against burst transient, the following immunity tests have been performed on a drive (with options if relevant), a shielded control cable, and a control box with potentiometer, motor cable, and motor. The tests were performed in accordance with the following basic standards. For more details, see *Table 10.40*.

- **EN 61000-4-2 (IEC 61000-4-2):** Electrostatic discharges (ESD): Simulation of electrostatic discharges from human beings.
- **EN 61000-4-3 (IEC 61000-4-3):** Incoming electromagnetic field radiation, amplitude modulated simulation of the effects of radar, radio communication equipment, and mobile communications equipment.
- **EN 61000-4-4 (IEC 61000-4-4):** Burst transients: Simulation of interference brought about by switching a contactor, relay, or similar devices.
- **EN 61000-4-5 (IEC 61000-4-5):** Surge transients: Simulation of transients brought about by lightning strikes near installations.
- **EN 61000-4-6 (IEC 61000-4-6):** RF common mode: Simulation of the effect from radio-transmission equipment joined by connection cables.

10

Basic standard	Burst IEC 61000-4-4	Surge IEC 61000-4-5	ESD IEC 61000-4-2	Radiated electro-magnetic field IEC 61000-4-3	RF common mode voltage IEC 61000-4-6
Acceptance criterion	**B**	**B**	**B**	**A**	**A**
Line	4 kV CM	2 kV/2 Ω DM 4 kV/12 Ω CM	–	–	10 V_{RMS}
Motor	4 kV CM	4 kV/2 Ω[1)]	–	–	10 V_{RMS}
Brake	4 kV CM	4 kV/2 Ω[1)]	–	–	10 V_{RMS}
Load sharing	4 kV CM	4 kV/2 Ω[1)]	–	–	10 V_{RMS}
Control wires	2 kV CM	2 kV/2 Ω[1)]	–	–	10 V_{RMS}
Standard bus	2 kV CM	2 kV/2 Ω[1)]	–	–	10 V_{RMS}
Relay wires	2 kV CM	2 kV/2 Ω[1)]	–	–	10 V_{RMS}
Application/fieldbus options	2 kV CM	2 kV/2 Ω[1)]	–	–	10 V_{RMS}
LCP cable	2 kV CM	2 kV/2 Ω[1)]	–	–	10 V_{RMS}
External 24 V DC	2 V CM	0.5 kV/2 Ω DM 1 kV/12 Ω CM	–	–	10 V_{RMS}
Enclosure	–	–	8 kV AD 6 kV CD	10 V/m	–

Table 10.40 EMC Immunity Form, Voltage Range: 380–480/500 V, 525–600 V, 525–690 V

1) Injection on cable shield.

AD: air discharge; CD: contact discharge; CM: common mode; DM: differential mode.

 Danfoss A/S © 01/2018 All rights reserved.

10.14.4 EMC Compatibility

NOTICE

OPERATOR RESPONSIBILITY

According to the EN 61800–3 standard for variable-speed drive systems, the operator is responsible for ensuring EMC compliance. Manufacturers can offer solutions for operation conforming to the standard. Operators are responsible for applying these solutions, and for paying the associated costs.

There are 2 options for ensuring electromagnetic compatibility.

- Eliminate or minimize interference at the source of emitted interference.
- Increase the immunity to interference in devices affected by its reception.

RFI filters

The goal is to obtain systems that operate stably without radio frequency interference between components. To achieve a high level of immunity, use drives with high-quality RFI filters.

NOTICE

RADIO INTERFERENCE

In a residential environment, this product can cause radio interference, in which case supplementary mitigation measures may be required.

PELV and galvanic isolation compliance

All E1h–E4h drives control and relay terminals comply with PELV (excluding grounded Delta leg above 400 V).

Galvanic (ensured) isolation is obtained by fulfilling requirements for higher isolation and by providing the relevant creepage/clearance distances. These requirements are described in the EN 61800–5–1 standard.

Electrical isolation is provided as shown (see *Illustration 10.26*). The components described comply with both PELV and the galvanic isolation requirements.

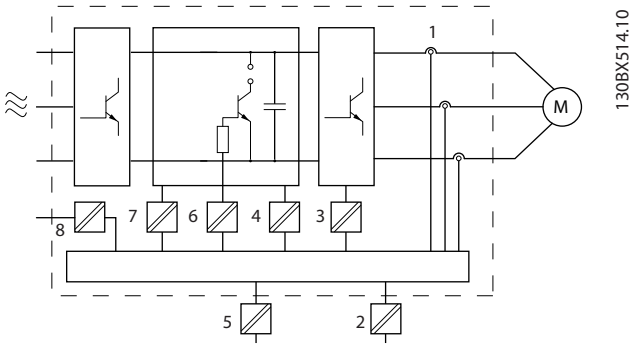

1	Current transducers
2	Galvanic isolation for the RS485 standard bus interface
3	Gate drive for the IGBTs
4	Supply (SMPS) including signal isolation of V DC, indicating the intermediate current voltage
5	Galvanic isolation for the 24 V back-up option
6	Opto-coupler, brake module (optional)
7	Internal inrush, RFI, and temperature measurement circuits
8	Customer relays

Illustration 10.26 Galvanic Isolation

10.15 EMC-compliant Installation

To obtain an EMC-compliant installation, follow the instructions provided in the *operating guide*. For an example of proper EMC installation, see *Illustration 10.27*.

NOTICE

TWISTED SHIELD ENDS (PIGTAILS)

Twisted shield ends increase the shield impedance at higher frequencies, which reduces the shield effect and increases the leakage current. Avoid twisted shield ends by using integrated shield clamps.

- For use with relays, control cables, a signal interface, fieldbus, or brake, connect the shield to the enclosure at both ends. If the ground path has high impedance, is noisy, or is carrying current, break the shield connection on 1 end to avoid ground current loops.
- Convey the currents back to the unit using a metal mounting plate. Ensure good electrical contact from the mounting plate through the mounting screws to the drive chassis.
- Use shielded cables for motor output cables. An alternative is unshielded motor cables within metal conduit.

 Danfoss A/S © 01/2018 All rights reserved.

NOTICE

SHIELDED CABLES

If shielded cables or metal conduits are not used, the unit and the installation do not meet regulatory limits on radio frequency (RF) emission levels.

- Ensure that motor and brake cables are as short as possible to reduce the interference level from the entire system.
- Avoid placing cables with a sensitive signal level alongside motor and brake cables.
- For communication and command/control lines, follow the particular communication protocol standards. For example, USB must use shielded cables, but RS485/ethernet can use shielded UTP or unshielded UTP cables.
- Ensure that all control terminal connections are PELV.

NOTICE

EMC INTERFERENCE

Use shielded cables for motor and control wiring. Make sure to separate mains input, motor, and control cables from one another. Failure to isolate these cables can result in unintended behavior or reduced performance. Minimum 200 mm (7.9 in) clearance between mains input, motor, and control cables are required.

NOTICE

INSTALLATION AT HIGH ALTITUDE

There is a risk for overvoltage. Isolation between components and critical parts could be insufficient, and not comply with PELV requirements. Reduce the risk for overvoltage by using external protective devices or galvanic isolation.
For installations above 2000 m (6500 ft) altitude, contact Danfoss regarding PELV compliance.

NOTICE

PELV COMPLIANCE

Prevent electric shock by using protective extra low voltage (PELV) electrical supply and complying with local and national PELV regulations.

 Danfoss A/S © 01/2018 All rights reserved.

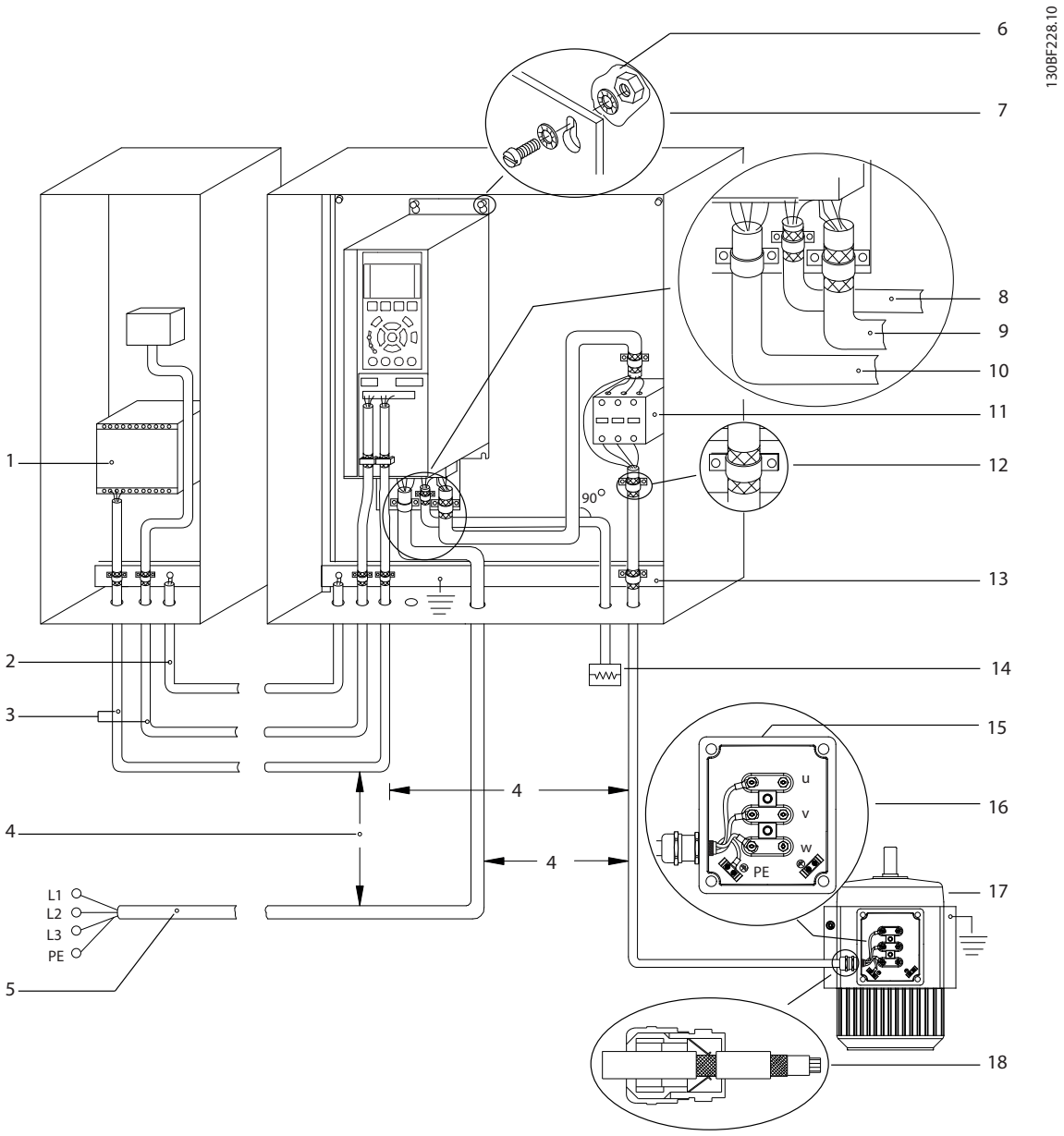

1	PLC	10	Mains cable (unshielded)
2	Minimum 16 mm^2 (6 AWG) equalizing cable	11	Output contactor
3	Control cables	12	Cable insulation stripped
4	Minimum 200 mm (7.9 in) between control cables, motor cables, and mains cables.	13	Common ground busbar. Follow local and national requirements for cabinet grounding.
5	Mains supply	14	Brake resistor
6	Bare (unpainted) surface	15	Metal box
7	Star washers	16	Connection to motor
8	Brake cable (shielded)	17	Motor
9	Motor cable (shielded)	18	EMC cable gland

Illustration 10.27 Example of Proper EMC Installation

 Danfoss A/S © 01/2018 All rights reserved.

10.16 Harmonics Overview

Non-linear loads such as found with drives do not draw current uniformly from the power line. This non-sinusoidal current has components which are multiples of the basic current frequency. These components are referred to as harmonics. It is important to control the total harmonic distortion on the mains supply. Although the harmonic currents do not directly affect electrical energy consumption, they generate heat in wiring and transformers that can affect other devices on the same power line.

10.16.1 Harmonic Analysis

Since harmonics increase heat losses, it is important to design systems with harmonics in mind to prevent overloading the transformer, inductors, and wiring. When necessary, perform an analysis of the system harmonics to determine equipment effects.

A non-sinusoidal current is transformed with a Fourier series analysis into sine-wave currents at different frequencies, that is, different harmonic currents I_N with 50 Hz or 60 Hz as the basic frequency.

10

Abbreviation	Description
f_1	Basic frequency (50 Hz or 60 Hz)
I_1	Current at the basic frequency
U_1	Voltage at the basic frequency
I_n	Current at the nth harmonic frequency
U_n	Voltage at the nth harmonic frequency
n	Harmonic order

Table 10.41 Harmonics-related Abbreviations

	Basic current (I_1)	Harmonic current (I_n)		
Current	I_1	I_5	I_7	I_{11}
Frequency	50 Hz	250 Hz	350 Hz	550 Hz

Table 10.42 Basic Currents and Harmonic Currents

Current	Harmonic current				
	I_{RMS}	I_1	I_5	I_7	I_{11-49}
Input current	1.0	0.9	0.5	0.2	<0.1

Table 10.43 Harmonic Currents vs. RMS Input Current

The voltage distortion on the mains supply voltage depends on the size of the harmonic currents multiplied by the mains impedance for the frequency in question. The total voltage distortion (THDi) is calculated based on the individual voltage harmonics using this formula:

$$THDi = \frac{\sqrt{U25 + U27 + ... + U2n}}{U}$$

10.16.2 Effect of Harmonics in a Power Distribution System

In *Illustration 10.28*, a transformer is connected on the primary side to a point of common coupling PCC1, on the medium voltage supply. The transformer has an impedance Z_{xfr} and feeds several loads. The point of common coupling where all loads are connected is PCC2. Each load connects through cables that have an impedance Z_1, Z_2, Z_3.

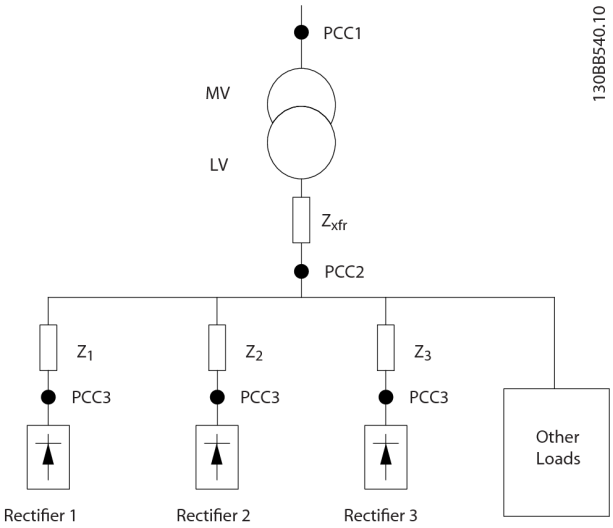

PCC	Point of common coupling
MV	Medium voltage
LV	Low voltage
Z_{xfr}	Transformer impedance
$Z_{\#}$	Modeling resistance and inductance in the wiring

Illustration 10.28 Small Distribution System

Harmonic currents drawn by non-linear loads cause distortion of the voltage because of the voltage drop on the impedances of the distribution system. Higher impedances result in higher levels of voltage distortion.

Current distortion relates to apparatus performance and it relates to the individual load. Voltage distortion relates to system performance. It is not possible to determine the voltage distortion in the PCC knowing only the harmonic performance of the load. To predict the distortion in the PCC, the configuration of the distribution system and relevant impedances must be known.

 Danfoss A/S © 01/2018 All rights reserved.

A commonly used term for describing the impedance of a grid is the short circuit ratio R_{sce}, where R_{sce} is defined as the ratio between the short circuit apparent power of the supply at the PCC (S_{sc}) and the rated apparent power of the load.

$$(S_{equ}).R_{sce} = \frac{S_{sc}}{S_{equ}}$$

where $S_{sc} = \frac{U^2}{Z_{supply}}$ and $S_{equ} = U \times I_{equ}$

Negative effects of harmonics

- Harmonic currents contribute to system losses (in cabling and transformer).
- Harmonic voltage distortion causes disturbance to other loads and increases losses in other loads.

10.16.3 IEC Harmonic Standards

In most of Europe, the basis for the objective assessment of the quality of mains power is the Electromagnetic Compatibility of Devices Act (EMVG). Compliance with these regulations ensures that all devices and networks connected to electrical distribution systems fulfill their intended purpose without generating problems.

Standard	Definition
EN 61000-2-2, EN 61000-2-4, EN 50160	Define the mains voltage limits required for public and industrial power grids.
EN 61000-3-2, 61000-3-12	Regulate mains interference generated by connected devices in lower current products.
EN 50178	Monitors electronic equipment for use in power installations.

Table 10.44 EN Design Standards for Mains Power Quality

There are 2 European standards that address harmonics in the frequency range from 0 Hz to 9 kHz:

EN 61000–2–2 (Compatibility Levels for Low-Frequency Conducted Disturbances and Signaling in Public Low-Voltage Power Supply Systems

The EN 61000–2–2 standard states the requirements for compatibility levels for PCC (point of common coupling) of low-voltage AC systems on a public supply network. Limits are specified only for harmonic voltage and total harmonic distortion of the voltage. EN 61000–2–2 does not define limits for harmonic currents. In situations where the total harmonic distortion THD(V)=8%, PCC limits are identical to those limits specified in the EN 61000–2–4 Class 2.

EN 61000–2–4 (Compatibility Levels for Low-Frequency Conducted Disturbances and Signaling in Industrial Plants)

The EN 61000–2–4 standard states the requirements for compatibility levels in industrial and private networks. The standard further defines the following 3 classes of electromagnetic environments:

- Class 1 relates to compatibility levels that are less than the public supply network, which affects equipment sensitive to disturbances (lab equipment, some automation equipment, and certain protection devices).
- Class 2 relates to compatibility levels that are equal to the public supply network. The class applies to PCCs on the public supply network and to IPCs (internal points of coupling) on industrial or other private supply networks. Any equipment designed for operation on a public supply network is allowed in this class.
- Class 3 relates to compatibility levels greater than the public supply network. This class applies only to IPCs in industrial environments. Use this class where the following equipment is found:
  - Large drives.
  - Welding machines.
  - Large motors starting frequently.
  - Loads that change quickly.

Typically, a class cannot be defined ahead of time without considering the intended equipment and processes to be used in the environment. VLT® high-power drives observe the limits of Class 3 under typical supply system conditions (R_{SC}>10 or $V_{k\ Line}$<10%).

 Danfoss A/S © 01/2018 All rights reserved.

Harmonic order (h)	Class 1 (V_h%)	Class 2 (V_h%)	Class 3 (V_h%)
5	3	6	8
7	3	5	7
11	3	3.5	5
13	3	3	4.5
17	2	2	4
17<h≤49	2.27 x (17/h) − 0.27	2.27 x (17/h) − 0.27	4.5 x (17/h) − 0.5

Table 10.45 Compatibility Levels for Harmonics

	Class 1	Class 2	Class 3
THDv	5%	8%	10%

Table 10.46 Compatibility Levels for the Total Harmonic Voltage Distortion THDv

10.16.4 Harmonic Compliance

Danfoss drives comply with the following standards:

- IEC61000-2-4
- IEC61000-3-4
- G5/4

10.16.5 Harmonic Mitigation

In cases where extra harmonic suppression is required, Danfoss offers the following mitigation equipment:

- VLT® 12-pulse Drives
- VLT® Low Harmonic Drives
- VLT® Advanced Harmonic Filters
- VLT® Advanced Active Filters

Selecting the right solution depends on several factors:

- The grid (background distortion, mains unbalance, resonance, and type of supply (transformer/generator).
- Application (load profile, number of loads, and load size).
- Local/national requirements/regulations (such as IEEE 519, IEC, and G5/4).
- Total cost of ownership (initial cost, efficiency, and maintenance).

10.16.6 Harmonic Calculation

Use the free Danfoss MCT 31 calculation software to determine the degree of voltage pollution on the grid and needed precaution. The *VLT® Harmonic Calculation MCT 31* is available at *www.danfoss.com*.

 Danfoss A/S © 01/2018 All rights reserved.

11 Basic Operating Principles of a Drive

This chapter provides an overview of the primary assemblies and circuitry of a Danfoss drive. It describes the internal electrical and signal processing functions. A description of the internal control structure is also included.

11.1 Description of Operation

A drive is an electronic controller that supplies a regulated amount of AC power to a 3-phase inductive motor. By supplying variable frequency and voltage to the motor, the drive varies the motor speed or maintains a constant speed as the load on the motor changes. Also, the drive can stop and start a motor without the mechanical stress associated with a line start.

In its basic form, the drive can be divided into the following 4 main areas:

Rectifier
The rectifier consists of SCRs or diodes that convert 3-phase AC voltage to pulsating DC voltage.

DC link (DC bus)
The DC link consists of inductors and capacitor banks that stabilize the pulsating DC voltage.

Inverter
The inverter uses IGBTs to convert the DC voltage to variable voltage and variable frequency AC.

Control
The control area consists of software that runs the hardware to produce the variable voltage that controls and regulates the AC motor.

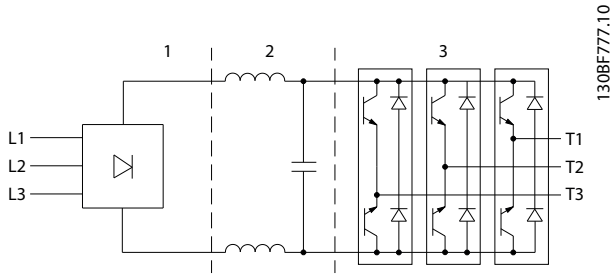

1	Rectifier (SCR/diodes)
2	DC link (DC bus)
3	Inverter (IGBTs)

Illustration 11.1 Internal Processing

11.2 Drive Controls

The following processes are used to control and regulate the motor:

- User input/reference.
- Feedback handling.
- User-defined control structure.
  - Open loop/closed-loop mode.
  - Motor control (speed, torque, or process).
- Control algorithms (VVC+, flux sensorless, flux with motor feedback, and internal current control VVC+).

11.2.1 User Inputs/References

The drive uses an input source (also called reference) to control and regulate the motor. The drive receives this input either:

- Manually via the LCP. This method is referred to as local (Hand On).
- Remotely via analog/digital inputs and various serial interfaces (RS485, USB, or an optional fieldbus). This method is referred to as remote (Auto On) and is the default input setting.

Active reference
The term active reference refers to the active input source. The active reference is configured in *parameter 3-13 Reference Site*. See *Illustration 11.2* and *Table 11.1*.

For more information, see the *programming guide*.

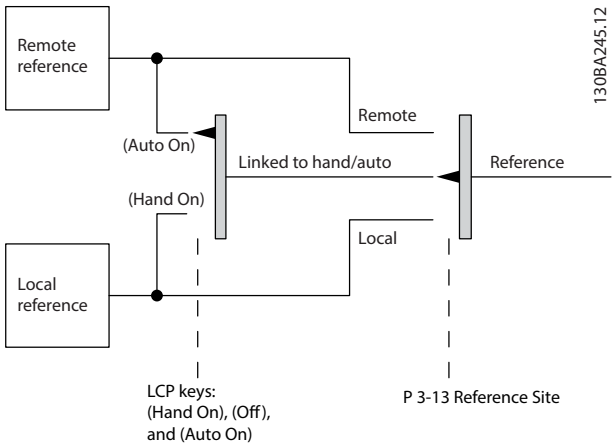

Illustration 11.2 Selecting Active Reference

 Danfoss A/S © 01/2018 All rights reserved.

LCP keys	*Parameter 3-13 Reference Site*	Active Reference
[Hand On]	Linked to hand/auto	Local
[Hand On]⇒(Off)	Linked to hand/auto	Local
[Auto On]	Linked to hand/auto	Remote
[Auto On]⇒(Off)	Linked to hand/auto	Remote
All keys	Local	Local
All keys	Remote	Remote

Table 11.1 Local and Remote Reference Configurations

11.2.2 Remote Handling of References

Remote handling of reference applies to both open-loop and closed-loop operation. See *Illustration 11.3*.

Up to 8 internal preset references can be programmed into the drive. The active internal preset reference can be selected externally through digital control inputs or through the serial communications bus.

External references can also be supplied to the drive, most commonly through an analog control input. All reference sources and the bus reference are added to produce the total external reference.

The active reference can be selected from the following:

- External reference
- Preset reference
- Setpoint
- Sum of the external reference, preset reference, and setpoint

The active reference can be scaled. The scaled reference is calculated as follows:

$$Reference = X + X \times \left(\frac{Y}{100}\right)$$

Where X is the external reference, the preset reference, or the sum of these references, and Y is *parameter 3-14 Preset Relative Reference* in [%].

If Y, *parameter 3-14 Preset Relative Reference*, is set to 0%, the scaling does not affect the reference.

 Danfoss A/S © 01/2018 All rights reserved.

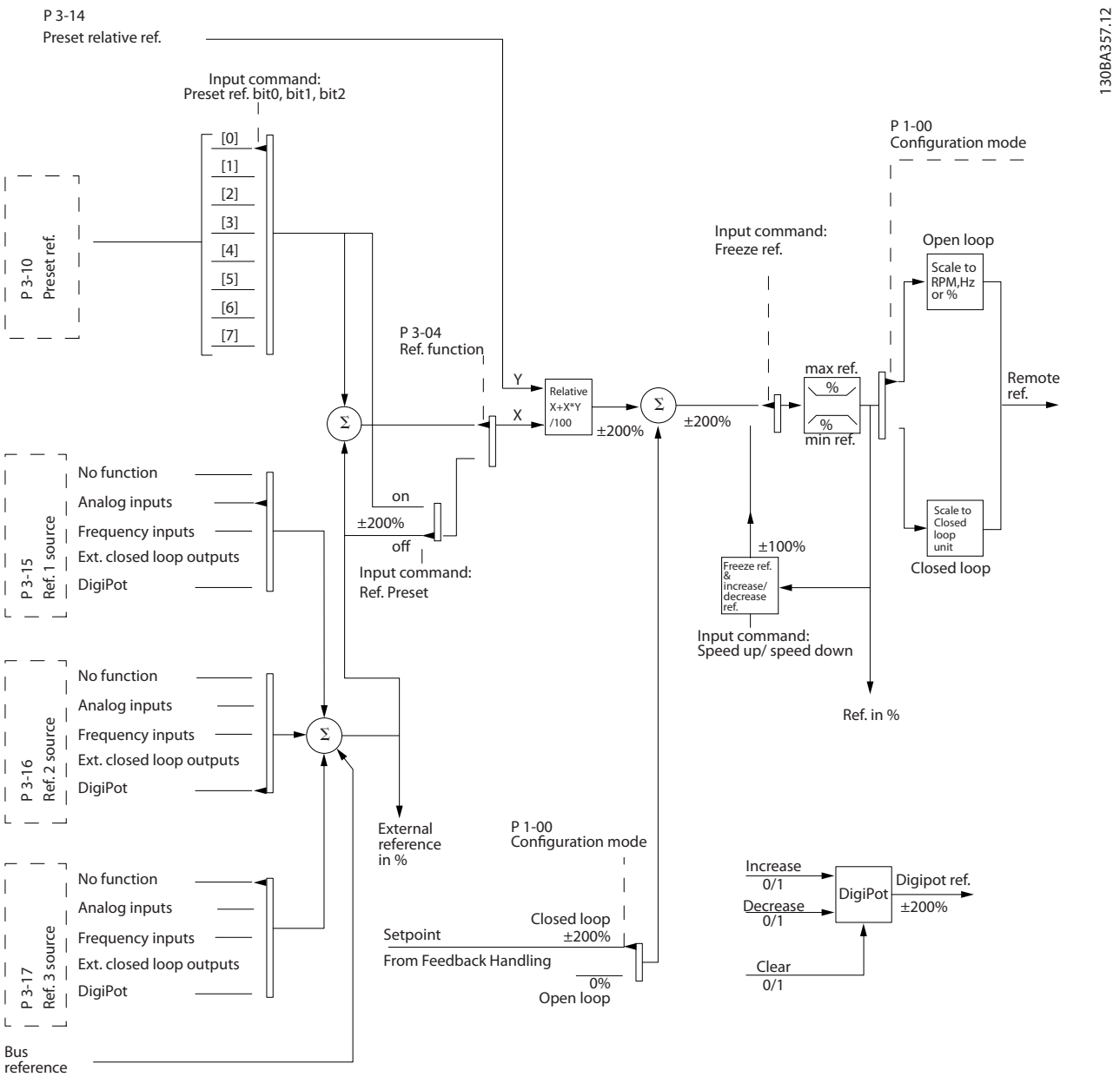

Illustration 11.3 Remote Handling of Reference

11

 Danfoss A/S © 01/2018 All rights reserved.

11.2.3 Feedback Handling

Feedback handling can be configured to work with applications requiring advanced control, such as multiple setpoints and multiple types of feedback. See *Illustration 11.4*. Three types of control are common:

Single zone (single setpoint)
This control type is a basic feedback configuration. Setpoint 1 is added to any other reference (if any) and the feedback signal is selected.

Multi-zone (single setpoint)
This control type uses 2 or 3 feedback sensors but only 1 setpoint. The feedback can be added, subtracted, or averaged. In addition, the maximum or minimum value can be used. Setpoint 1 is used exclusively in this configuration.

Multi-zone (setpoint/feedback)
The setpoint/feedback pair with the largest difference controls the speed of the drive. The maximum value attempts to keep all zones at or below their respective setpoints, while the minimum value attempts to keep all zones at or above their respective setpoints.

Example
A 2-zone, 2-setpoint application. Zone 1 setpoint is 15 bar, and the feedback is 5.5 bar. Zone 2 setpoint is 4.4 bar, and the feedback is 4.6 bar. If maximum is selected, the zone 2 setpoint and feedback are sent to the PID controller, since it has the smaller difference (feedback is higher than setpoint, resulting in a negative difference). If minimum is selected, the zone 1 setpoint and feedback is sent to the PID controller, since it has the larger difference (feedback is lower than setpoint, resulting in a positive difference).

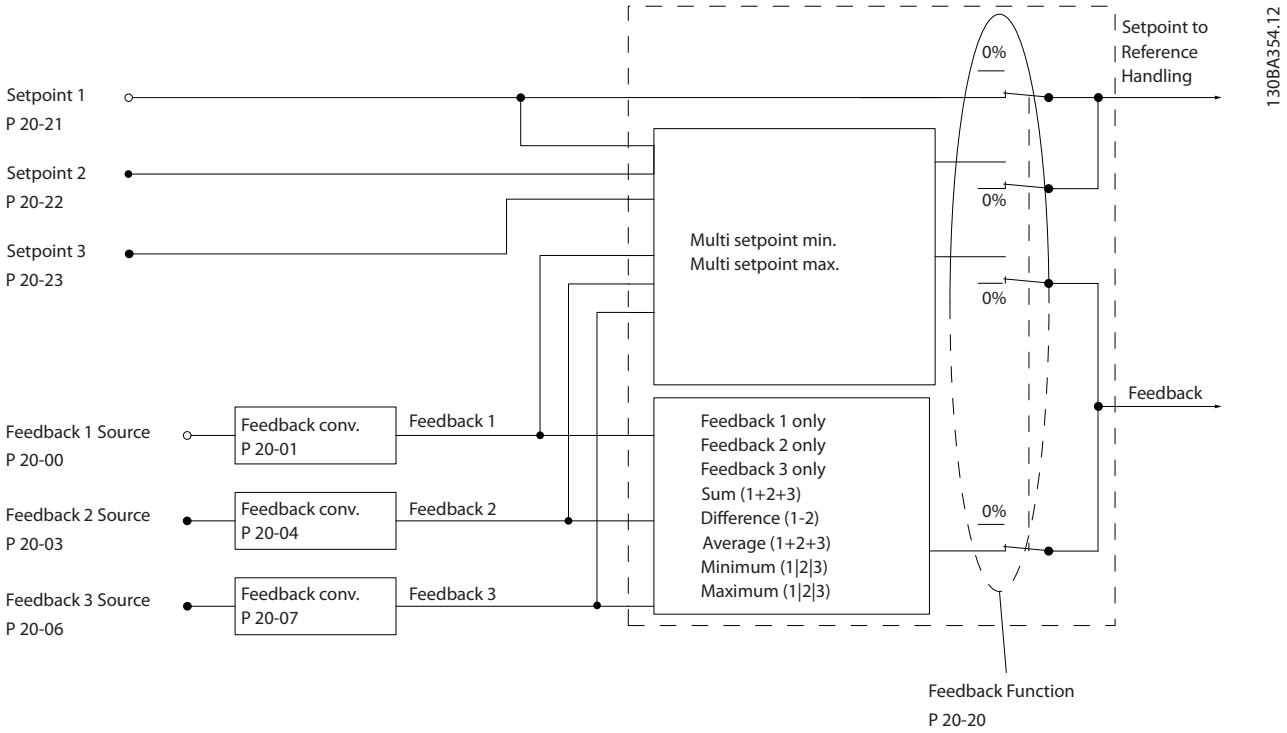

Illustration 11.4 Block Diagram of Feedback Signal Processing

 Danfoss A/S © 01/2018 All rights reserved.

Feedback conversion

In some applications, it is useful to convert the feedback signal. One example is using a pressure signal to provide flow feedback. Since the square root of pressure is proportional to flow, the square root of the pressure signal yields a value proportional to the flow, see *Illustration 11.5*.

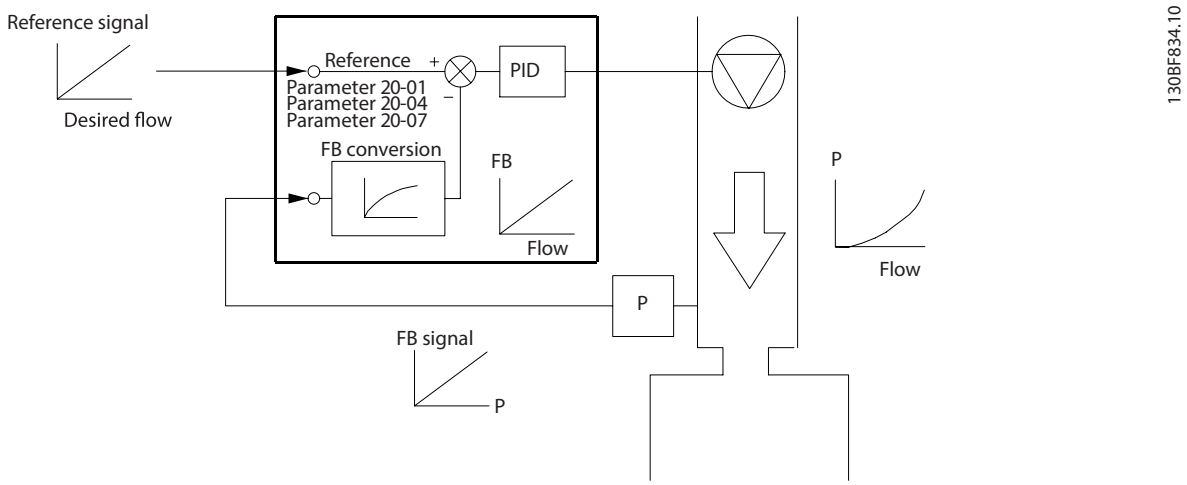

Illustration 11.5 Feedback Conversion

11.2.4 Control Structure Overview

The control structure is a software process that controls the motor based on user-defined references (for example, RPM) and whether feedback is used/not used (closed loop/open loop). The operator defines the control in *parameter 1-00 Configuration Mode*.

The control structures are as follows:

Open-loop control structure

- Speed (RPM)
- Torque (Nm)

Closed-loop control structure

- Speed (RPM)
- Torque (Nm)
- Process (user-defined units, for example, feet, lpm, psi, %, bar)

11.2.5 Open-loop Control Structure

In open-loop mode, the drive uses 1 or more references (local or remote) to control the speed or torque of the motor. There are 2 types of open-loop control:

- Speed control. No feedback from the motor.
- Torque control. Used in VVC$^+$ mode. The function is used in mechanically robust applications, but its accuracy is limited. Open-loop torque function works only in 1 speed direction. The torque is calculated based on current measurement within the drive. See *chapter 12 Application Examples*.

In the configuration shown in *Illustration 11.6*, the drive operates in open-loop mode. It receives input from either the LCP (hand-on mode) or via a remote signal (auto-on mode).

 Danfoss A/S © 01/2018 All rights reserved.

The signal (speed reference) is received and conditioned with the following:

- Programmed minimum and maximum motor speed limits (in RPM and Hz).
- Ramp-up and ramp-down times.
- Motor rotation direction.

The reference is then passed on to control the motor.

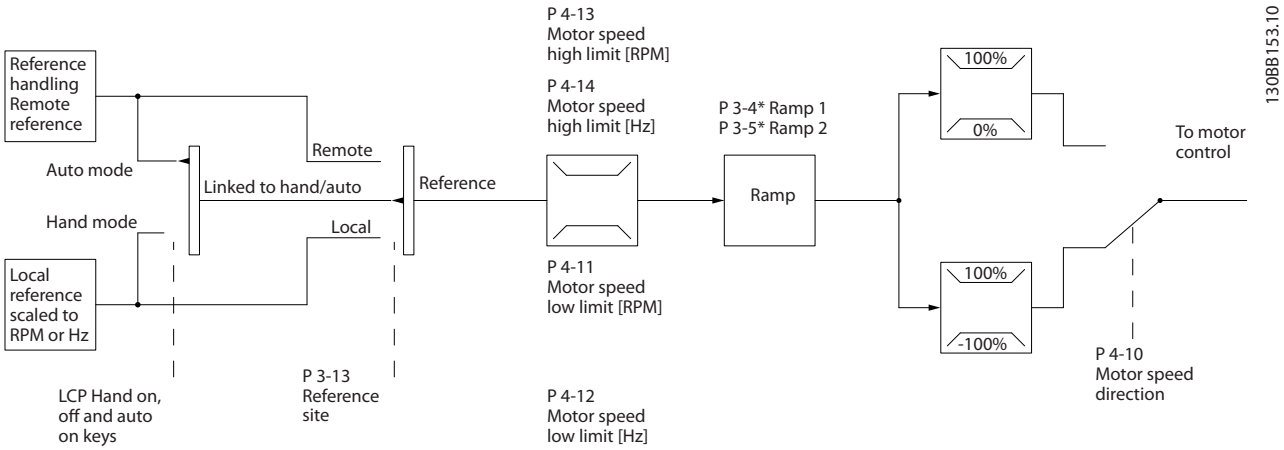

Illustration 11.6 Block Diagram of an Open-loop Control Structure

11.2.6 Closed-loop Control Structure

In closed-loop mode, the drive uses 1 or more references (local or remote) and feedback sensors to control the motor. The drive receives a feedback signal from a sensor in the system. It then compares this feedback to a setpoint reference value and determines if there is any discrepancy between these 2 signals. The drive then adjusts the speed of the motor to correct the discrepancy.

For example, consider a pump application in which the speed of the pump is controlled so that the static pressure in a pipe is constant (see *Illustration 11.7*). The drive receives a feedback signal from a sensor in the system. It compares this feedback to a setpoint reference value and determines the discrepancy if any, between these 2 signals. It then adjusts the speed of the motor to compensate for the discrepancy.

The static pressure setpoint is the reference signal to the drive. A static pressure sensor measures the actual static pressure in the pipe and provides this information to the drive as a feedback signal. If the feedback signal exceeds the setpoint reference, the drive ramps down to reduce the pressure. Similarly, if the pipe pressure is lower than the setpoint reference, the drive ramps up to increase the pump pressure.

There are 3 types of closed-loop control:

- Speed control. This type of control requires a speed PID feedback for an input. A properly optimized speed closed-loop control has higher accuracy than a speed open-loop control. Speed control is only used in the VLT® AutomationDrive FC 302.
- Torque control. Used in flux mode with encoder feedback, this control offers superior performance in all 4 quadrants and at all motor speeds. Torque control is only used in the VLT® AutomationDrive FC 302.
  The torque control function is used in applications where the torque on the motor output shaft is controlling the application as tension control. Torque setting is done by setting an analog, digital, or bus-controlled reference. When running torque control, it is recommended to make a full AMA procedure since the correct motor data is essential for optimal performance.
- Process control. Used to control application parameters that are measured by different sensors (pressure, temperature, and flow) and are affected by the connected motor through a pump or fan.

 Danfoss A/S © 01/2018 All rights reserved.

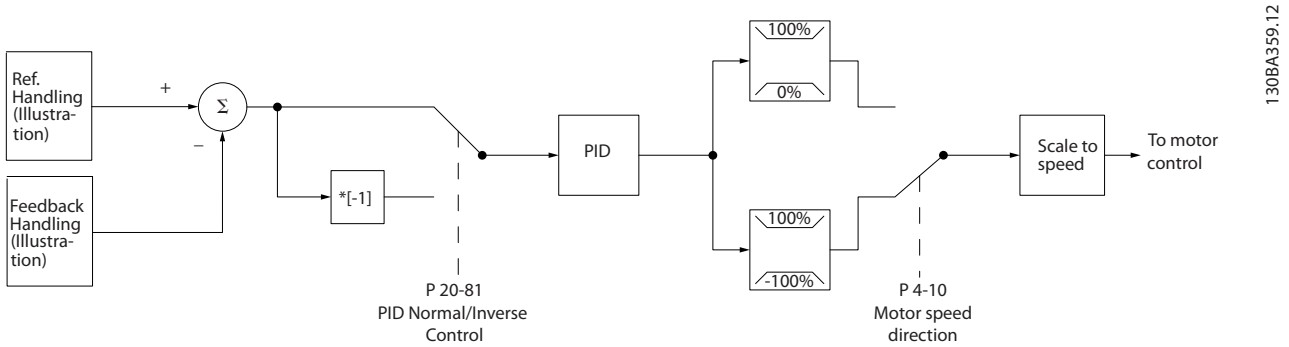

Illustration 11.7 Block Diagram of Closed-loop Controller

Programmable features

While the default values for the drive in closed loop often provide satisfactory performance, system control can often be optimized by tuning the PID parameters. *Auto tuning* is provided for this optimization.

- Inverse regulation - motor speed increases when a feedback signal is high.
- Start-up frequency - lets the system quickly reach an operating status before the PID controller takes over.
- Built-in lowpass filter - reduces feedback signal noise.

11.2.7 Control Processing

See *Active/Inactive Parameters in Different Drive Control Modes* in the *programming guide* for an overview of which control configuration is available for your application, depending on selection of AC motor or PM non-salient motor.

11.2.7.1 Control Structure in VVC+

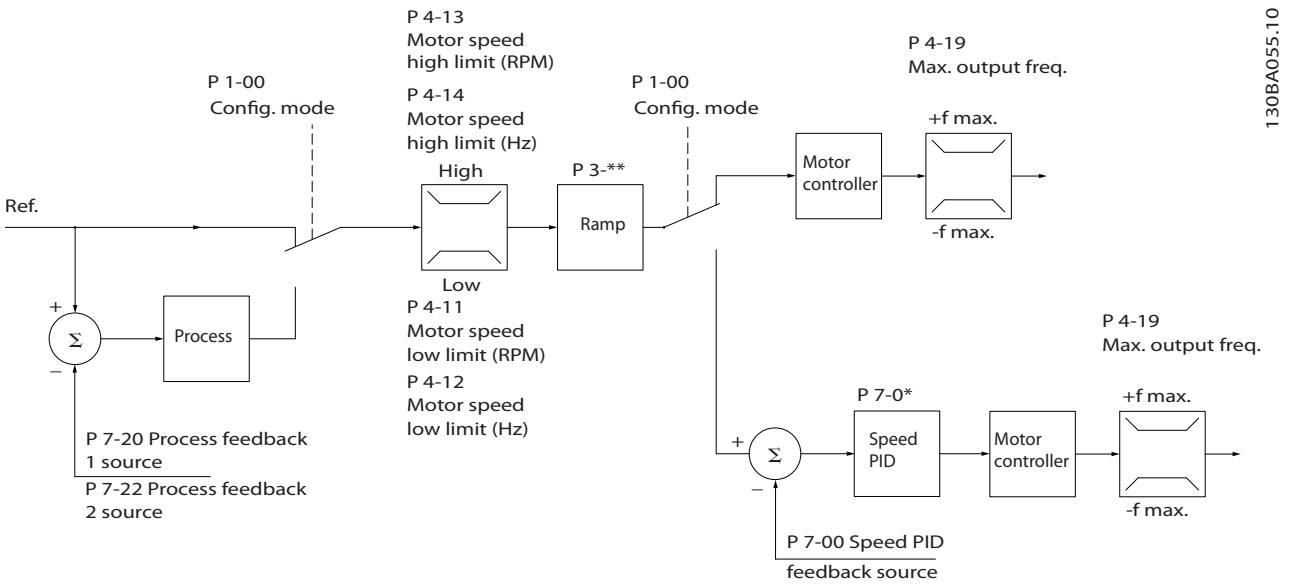

Illustration 11.8 Control Structure in VVC+ Open Loop and Closed-loop Configurations

In *Illustration 11.8*, the resulting reference from the reference handling system is received and fed through the ramp limitation and speed limitation before being sent to the motor control. The output of the motor control is then limited by the maximum frequency limit.

 Danfoss A/S © 01/2018 All rights reserved.

Parameter 1-01 Motor Control Principle is set to *[1] VVC+* and *parameter 1-00 Configuration Mode* is set to *[0] Speed open loop*. If *parameter 1-00 Configuration Mode* is set to *[1] Speed closed loop*, the resulting reference is passed from the ramp limitation and speed limitation into a speed PID control. The speed PID control parameters are located in *parameter group 7-0* Speed PID Ctrl*. The resulting reference from the speed PID control is sent to the motor control limited by the frequency limit.

Select *[3] Process* in *parameter 1-00 Configuration Mode* to use the process PID control for closed-loop control of, for example, speed or pressure in the controlled application. The process PID parameters are in *parameter groups 7-2* Process Ctrl. Feedb* and *7-3* Process PID Ctrl*.

11.2.7.2 Control Structure in Flux Sensorless

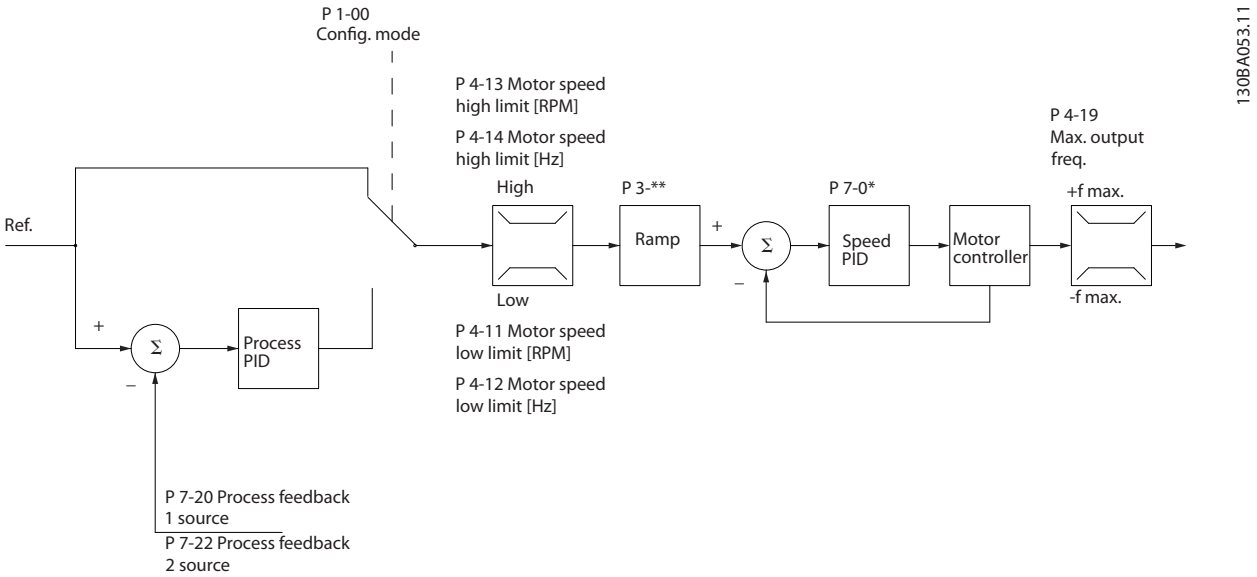

Illustration 11.9 Control Structure in Flux Sensorless Open Loop and Closed-loop Configurations

In *Illustration 11.9*, the resulting reference from the reference handling system is fed through the ramp and speed limitations as determined by the parameter settings indicated.

Parameter 1-01 Motor Control Principle is set to *[2] Flux Sensorless* and *parameter 1-00 Configuration Mode* is set to *[0] Speed open loop*. An estimated speed feedback is generated to the speed PID to control the output frequency. The speed PID must be set with its P, I, and D parameters (*parameter group 7-0* Speed PID control*).

Select *[3] Process* in *parameter 1-00 Configuration Mode* to use the process PID control for closed-loop control of the controlled application. The process PID parameters are found in *parameter groups 7-2* Process Ctrl. Feedb* and *7-3* Process PID Ctrl*.

 Danfoss A/S © 01/2018 All rights reserved.

11.2.7.3 Control Structure in Flux with Motor Feedback

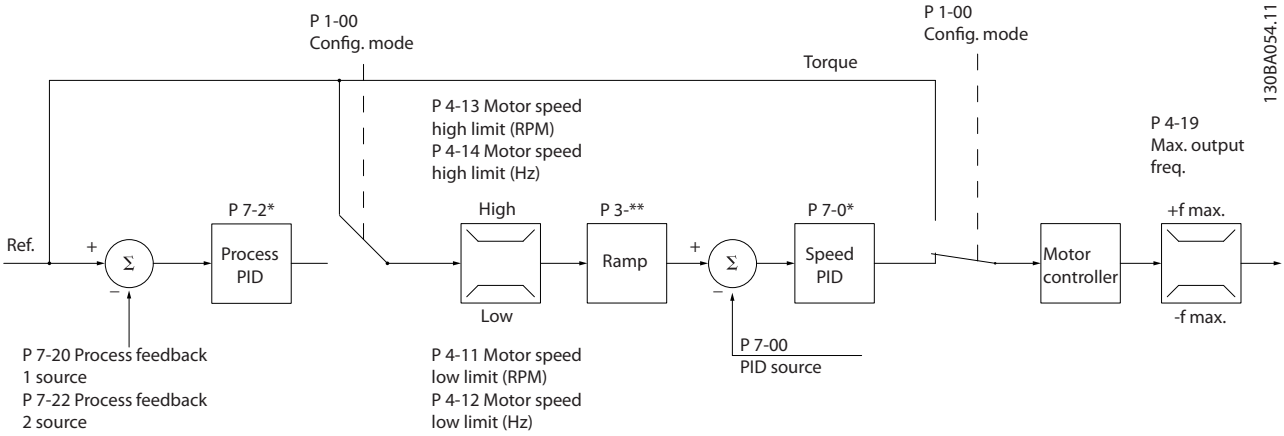

Illustration 11.10 Control Structure in Flux with Motor Feedback Configuration

In *Illustration 11.10*, the motor control in this configuration relies on a feedback signal from an encoder or resolver mounted directly on the motor (set in *parameter 1-02 Flux Motor Feedback Source*). The resulting reference can be used as input for the speed PID control, or directly as a torque reference.

Parameter 1-01 Motor Control Principle is set to *[3] Flux w motor feedb* and *parameter 1-00 Configuration Mode* is set to *[1] Speed closed loop*. The speed PID control parameters are in *parameter group 7-0* Speed PID Control*.

Torque control can only be selected in the *Flux with motor feedback* (*parameter 1-01 Motor Control Principle*) configuration. When this mode has been selected, the reference uses the Nm unit. It requires no torque feedback, since the actual torque is calculated based on the current measurement of the drive.

Process PID control can be used for closed-loop control of speed or pressure in the controlled application. The process PID parameters are in *parameter groups 7-2* Process Ctrl. Feedb* and *7-3* Process PID Ctrl*.

11

11.2.7.4 Internal Current Control in VVC$^+$ Mode

When the motor torque exceeds the torque limits set in *parameter 4-16 Torque Limit Motor Mode*, *parameter 4-17 Torque Limit Generator Mode*, and *parameter 4-18 Current Limit*, the integral current limit control is activated.
When the drive is at the current limit during motor operation or regenerative operation, it tries to get below the preset torque limits as quickly as possible without losing control of the motor.

 Danfoss A/S © 01/2018 All rights reserved.

12 Application Examples

The examples in this section are intended as a quick reference for common applications.

- Parameter settings are the regional default values unless otherwise indicated (selected in *parameter 0-03 Regional Settings*).
- Parameters associated with the terminals and their settings are shown next to the drawings.
- Switch settings for analog terminals A53 or A54 are shown where required.
- For STO, a jumper wire may be required between terminal 12 and terminal 37 when using factory default programming values.

12.1 Programming a Closed-loop Drive System

A closed-loop drive system usually consists of the following:

- Motor
- Drive
- Encoder as feedback system
- Mechanical brake
- Brake resistor for dynamic braking
- Transmission
- Gear box
- Load

Applications demanding mechanical brake control typically need a brake resistor.

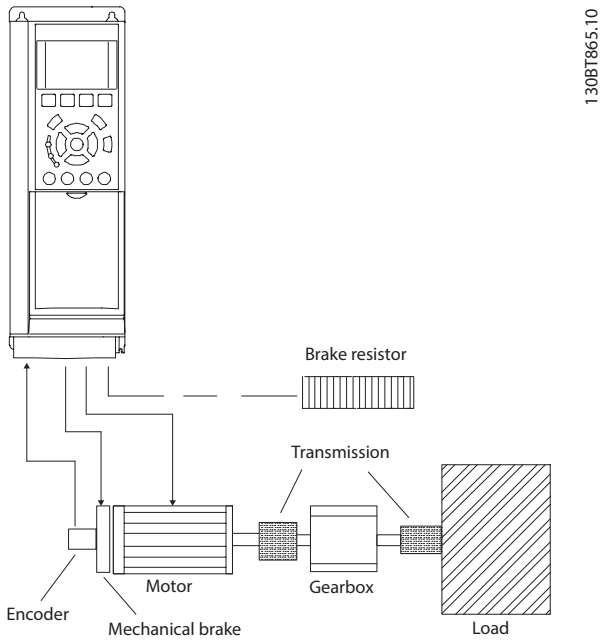

Illustration 12.1 Basic Set-up for FC 302 Closed-loop Speed Control

12.2 Wiring Configurations for Automatic Motor Adaptation (AMA)

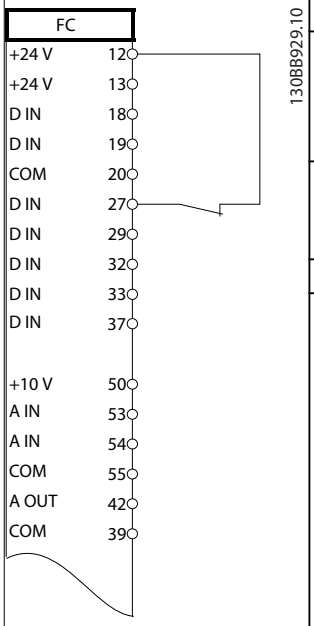

	Parameters	
	Function	**Setting**
	Parameter 1-29 Automatic Motor Adaptation (AMA)	*[1] Enable complete AMA*
	Parameter 5-12 T erminal 27 Digital Input	*[2]* Coast inverse*
	*=Default value	
	Notes/comments: Set *parameter group 1-2* Motor Data* according to motor nameplate.	

Table 12.1 Wiring Configuration for AMA with T27 Connected

 Danfoss A/S © 01/2018 All rights reserved.

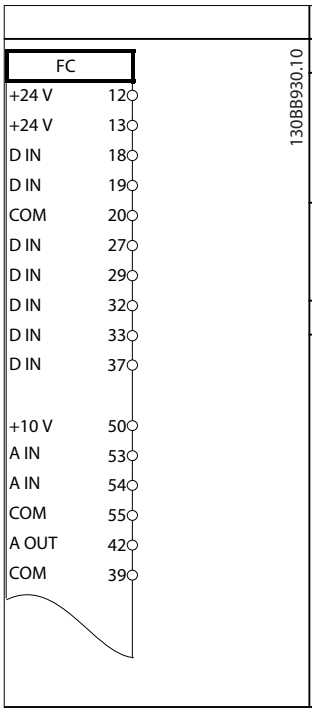

Parameters	
Function	**Setting**
Parameter 1-29 Automatic Motor Adaptation (AMA)	*[1] Enable complete AMA*
Parameter 5-12 Terminal 27 Digital Input	*[0] No operation*
*=Default value	
Notes/comments: Set *parameter group 1-2* Motor Data* according to motor nameplate.	

Table 12.2 Wiring Configuration for AMA without T27 Connected

12.3 Wiring Configurations for Analog Speed Reference

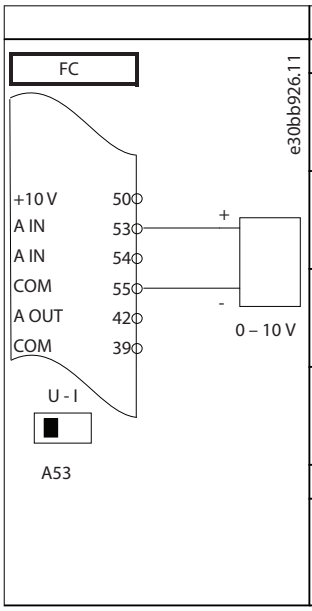

Parameters	
Function	**Setting**
Parameter 6-10 Terminal 53 Low Voltage	0.07 V*
Parameter 6-11 Terminal 53 High Voltage	10 V*
Parameter 6-14 Terminal 53 Low Ref./Feedb. Value	0 RPM
Parameter 6-15 Terminal 53 High Ref./Feedb. Value	1500 RPM
*=Default value	
Notes/comments:	

Table 12.3 Wiring Configuration for Analog Speed Reference (Voltage)

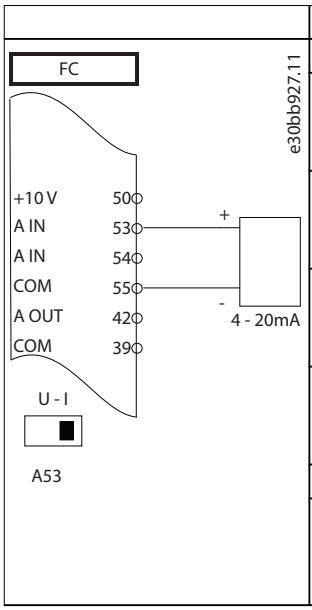

Parameters	
Function	**Setting**
Parameter 6-12 Terminal 53 Low Current	4 mA*
Parameter 6-13 Terminal 53 High Current	20 mA*
Parameter 6-14 Terminal 53 Low Ref./Feedb. Value	0 RPM
Parameter 6-15 Terminal 53 High Ref./Feedb. Value	1500 RPM
*=Default value	
Notes/comments:	

Table 12.4 Wiring Configuration for Analog Speed Reference (Current)

12.4 Wiring Configurations for Start/Stop

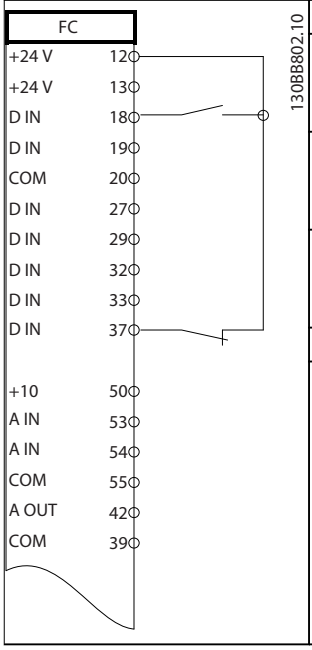

Parameters	
Function	**Setting**
Parameter 5-10 Terminal 18 Digital Input	*[8] Start**
Parameter 5-12 Terminal 27 Digital Input	*[0] No operation*
Parameter 5-19 Terminal 37 Safe Stop	*[1] Safe Torque Off Alarm*
*=Default value	
Notes/comments: If *parameter 5-12 Terminal 27 Digital Input* is set to *[0] No operation*, a jumper wire to terminal 27 is not needed.	

Table 12.5 Wiring Configuration for Start/Stop Command with Safe Torque Off

 Danfoss A/S © 01/2018 All rights reserved.

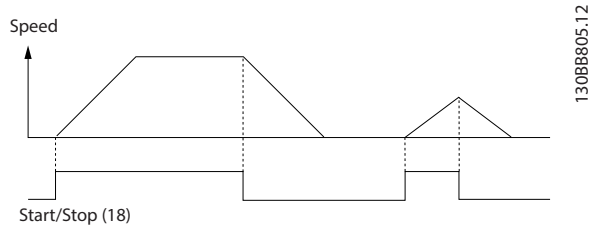

Illustration 12.2 Start/Stop with Safe Torque Off

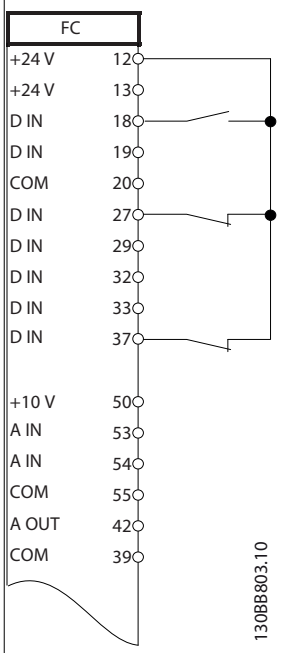

Parameters	
Function	**Setting**
Parameter 5-10 Terminal 18 Digital Input	*[9] Latched Start*
Parameter 5-12 Terminal 27 Digital Input	*[6] Stop Inverse*
*=Default value	
Notes/comments: If *parameter 5-12 Terminal 27 Digital Input* is set to *[0] No operation*, a jumper wire to terminal 27 is not needed.	

Table 12.6 Wiring Configuration for Pulse Start/Stop

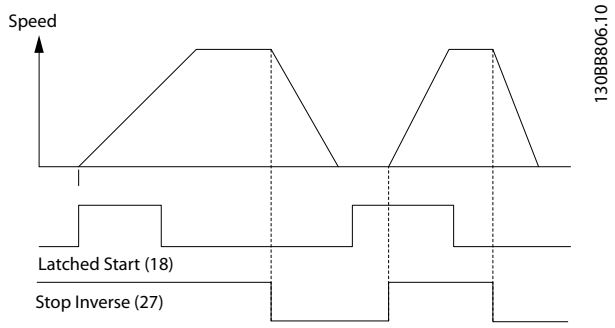

Illustration 12.3 Latched Start/Stop Inverse

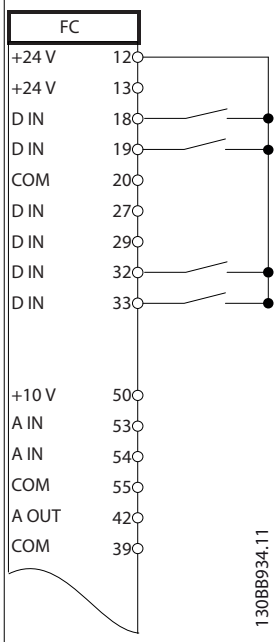

Parameters	
Function	**Setting**
Parameter 5-10 Terminal 18 Digital Input	*[8] Start*
Parameter 5-11 Terminal 19 Digital Input	*[10] Reversing**
Parameter 5-12 Terminal 27 Digital Input	*[0] No operation*
Parameter 5-14 Terminal 32 Digital Input	*[16] Preset ref bit 0*
Parameter 5-15 Terminal 33 Digital Input	*[17] Preset ref bit 1*
Parameter 3-10 Preset Reference	
Preset ref. 0	25%
Preset ref. 1	50%
Preset ref. 2	75%
Preset ref. 3	100%
*=Default value	
Notes/comments:	

Table 12.7 Wiring Configuration for Start/Stop with Reversing and 4 Preset Speeds

 Danfoss A/S © 01/2018 All rights reserved.

12.5 Wiring Configuration for an External Alarm Reset

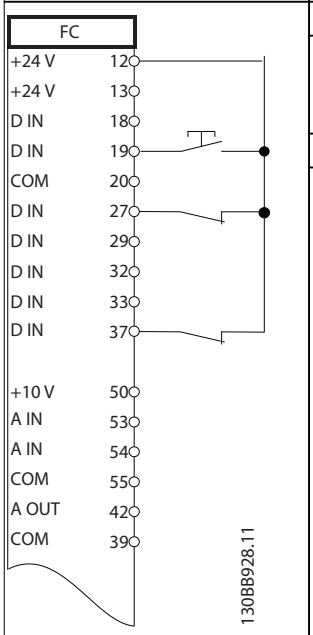

	Parameters	
	Function	**Setting**
	Parameter 5-11 Terminal 19 Digital Input	*[1] Reset*
	*=Default value	
	Notes/comments:	

Table 12.8 Wiring Configuration for an External Alarm Reset

12.6 Wiring Configuration for Speed Reference Using a Manual Potentiometer

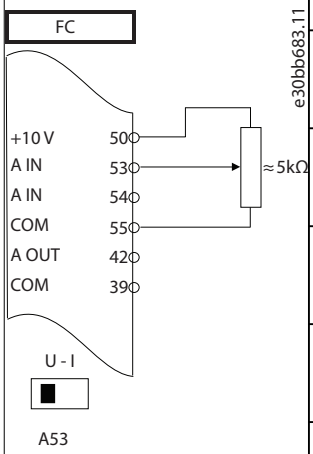

	Parameters	
	Function	**Setting**
	Parameter 6-10 Terminal 53 Low Voltage	0.07 V*
	Parameter 6-11 Terminal 53 High Voltage	10 V*
	Parameter 6-14 Terminal 53 Low Ref./Feedb. Value	0 RPM
	Parameter 6-15 Terminal 53 High Ref./Feedb. Value	1500 RPM
	*=Default value	
	Notes/comments:	

Table 12.9 Wiring Configuration for Speed Reference (Using a Manual Potentiometer)

12.7 Wiring Configuration for Speed Up/ Speed Down

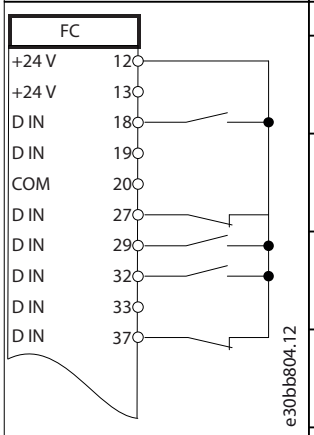

	Parameters	
	Function	**Setting**
	Parameter 5-10 Terminal 18 Digital Input	*[8] Start**
	Parameter 5-12 Terminal 27 Digital Input	*[19] Freeze Reference*
	Parameter 5-13 Terminal 29 Digital Input	*[21] Speed Up*
	Parameter 5-14 Terminal 32 Digital Input	*[22] Speed Down*
	*=Default value	
	Notes/comments:	

Table 12.10 Wiring Configuration for Speed Up/Speed Down

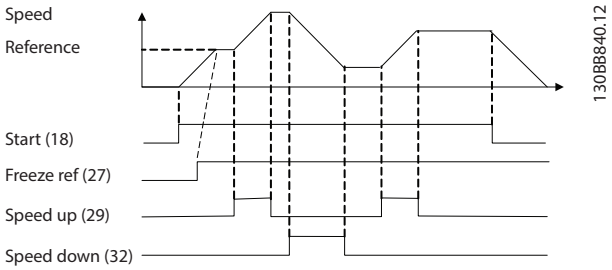

Illustration 12.4 Speed Up/Speed Down

12

 Danfoss A/S © 01/2018 All rights reserved.

12.8 Wiring Configuration for RS485 Network Connection

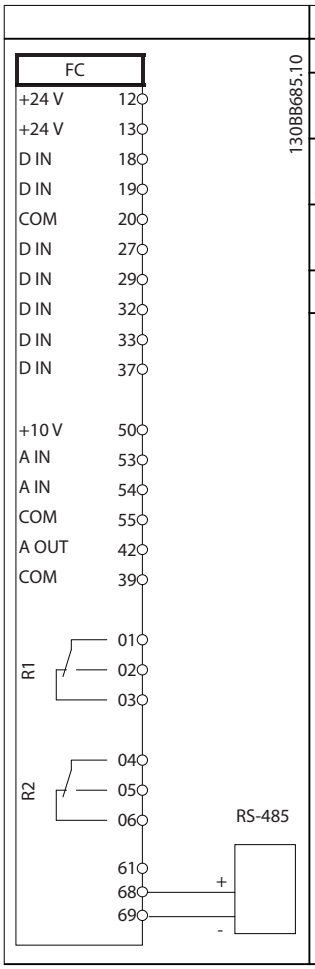

Parameters	
Function	**Setting**
Parameter 8-30 Protocol	FC*
Parameter 8-31 Address	1*
Parameter 8-32 Baud Rate	9600*
*=Default value	
Notes/comments: Select protocol, address, and baud rate in the parameters.	

Table 12.11 Wiring Configuration for RS485 Network Connection

12.9 Wiring Configuration for a Motor Thermistor

NOTICE

Thermistors must use reinforced or double insulation to meet PELV insulation requirements.

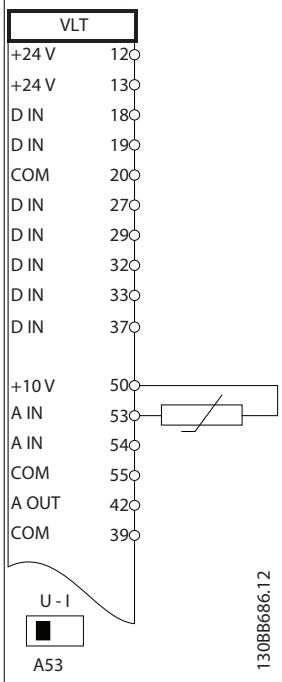

Parameters	
Function	**Setting**
Parameter 1-90 Motor Thermal Protection	*[2] Thermistor trip*
Parameter 1-93 Thermistor Source	*[1] analog input 53*
*=Default value	
Notes/comments: If only a warning is wanted, set *parameter 1-90 Motor Thermal Protection* to *[1] Thermistor warning*.	

Table 12.12 Wiring Configuration for a Motor Thermistor

12

 Danfoss A/S © 01/2018 All rights reserved.

12.10 Wiring Configuration for a Relay Set-up with Smart Logic Control

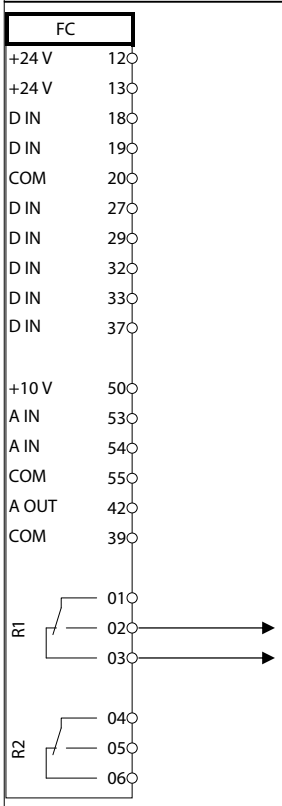

Parameters	
Function	**Setting**
Parameter 4-30 Motor Feedback Loss Function	*[1] Warning*
Parameter 4-31 Motor Feedback Speed Error	100 RPM
Parameter 4-32 Motor Feedback Loss Timeout	5 s
Parameter 7-00 Speed PID Feedback Source	*[2] MCB 102*
Parameter 17-11 Resolution (PPR)	1024*
Parameter 13-00 SL Controller Mode	*[1] On*
Parameter 13-01 Start Event	*[19] Warning*
Parameter 13-02 Stop Event	*[44] Reset key*
Parameter 13-10 Comparator Operand	*[21] Warning no.*
Parameter 13-11 Comparator Operator	*[1] ≈ (equal)**
Parameter 13-12 Comparator Value	90
Parameter 13-51 SL Controller Event	*[22] Comparator 0*
Parameter 13-52 SL Controller Action	*[32] Set digital out A low*
Parameter 5-40 Function Relay	*[80] SL digital output A*
*=Default value	

Notes/comments:
If the limit in the feedback monitor is exceeded, *warning 90, Feedback Mon.* is issued. The SLC monitors *warning 90, Feedback Mon.* and if the warning becomes true, relay 1 is triggered. External equipment may require service. If the feedback error goes below the limit again within 5 s, the drive continues and the warning disappears. Reset relay 1 by pressing [Reset] on the LCP.

Table 12.13 Wiring Configuration for a Relay Set-up with Smart Logic Control

12.11 Wiring Configuration for Mechanical Brake Control

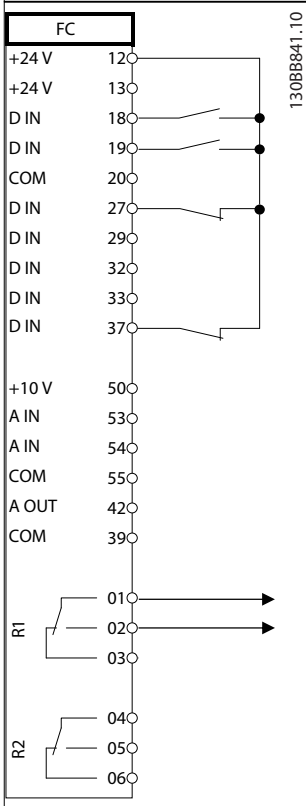

Parameters	
Function	**Setting**
Parameter 5-40 Function Relay	*[32] Mech. brake ctrl.*
Parameter 5-10 Terminal 18 Digital Input	*[8] Start**
Parameter 5-11 Terminal 19 Digital Input	*[11] Start reversing*
Parameter 1-71 Start Delay	0.2
Parameter 1-72 Start Function	*[5] VVC+/ FLUX Clockwise*
Parameter 1-76 Start Current	$I_{m,n}$
Parameter 2-20 Release Brake Current	Application dependent
Parameter 2-21 Activate Brake Speed [RPM]	Half of nominal slip of the motor
*=Default value	
Notes/comments:	

Table 12.14 Wiring Configuration for Mechanical Brake Control

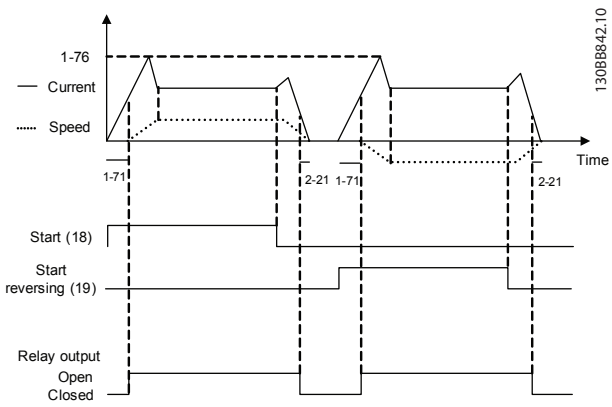

Illustration 12.5 Mechanical Brake Control

 Danfoss A/S © 01/2018 All rights reserved.

12.12 Wiring Configuration for the Encoder

The direction of the encoder, identified by looking into the shaft end, is determined by which order the pulses enter the drive. See *Illustration 12.6*.

- Clockwise (CW) direction means channel A is 90 electrical degrees before channel B.
- Counterclockwise (CCW) direction means channel B is 90 electrical degrees before A.

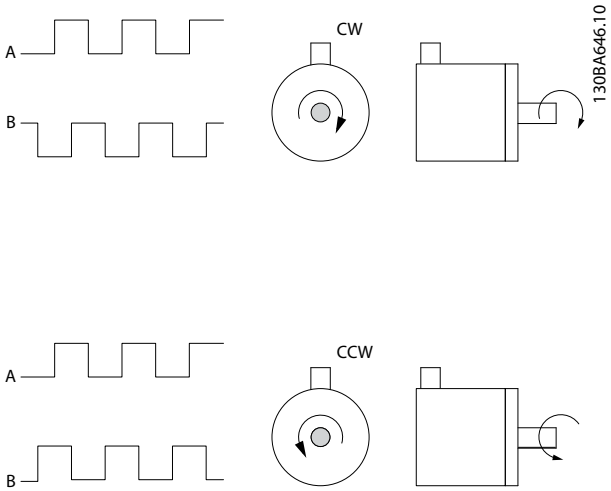

Illustration 12.6 Determining Encoder Direction

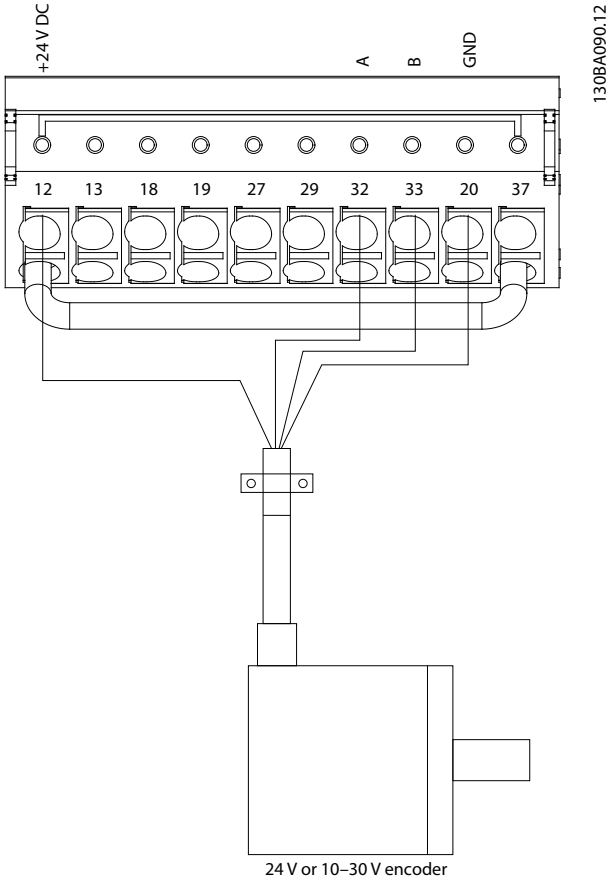

Illustration 12.7 Wire Configuration for the Encoder

NOTICE

Maximum cable length 5 m (16 ft).

12.13 Wire Configuration for Torque and Stop Limit

In applications with an external electro-mechanical brake, such as hoisting applications, it is possible to stop the drive via a standard stop command and simultaneously activate the external electro-mechanical brake. *Illustration 12.8* shows the programming of these drive connections.

If a stop command is active via terminal 18 and the drive is not at the torque limit, the motor ramps down to 0 Hz. If the drive is at the torque limit and a stop command is activated, the system activates terminal 29 output (programmed to *[27] Torque limit & stop*). The signal to terminal 27 changes from logic 1 to logic 0 and the motor starts to coast. This process ensures that the hoist stops even if the drive itself cannot handle the required torque, for example due to excessive overload.

To program the stop and torque limit, connect to the following terminals:

- Start/stop via terminal 18 (*Parameter 5-10 Terminal 18 Digital Input [8] Start*).
- Quick stop via terminal 27

 Danfoss A/S © 01/2018 All rights reserved.

(*Parameter 5-12 Terminal 27 Digital Input [2] Coasting Stop, Inverse*).

- Terminal 29 output
  (*Parameter 5-02 Terminal 29 Mode [1] Terminal 29 Mode Output* and *parameter 5-31 Terminal 29 Digital Output [27] Torque limit & stop*).
- Relay output [0] (Relay 1)
  (*Parameter 5-40 Function Relay [32] Mechanical Brake Control*).

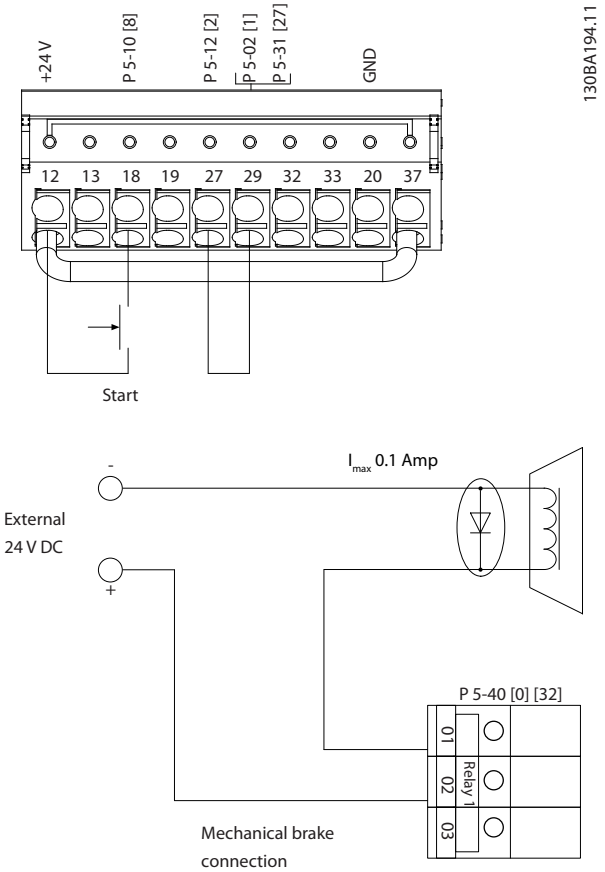

Illustration 12.8 Wire Configuration for Torque and Stop Limit

12

 Danfoss A/S © 01/2018 All rights reserved.

13 How to Order a Drive

13.1 Drive Configurator

1	2	3	4	5	6	7	8	9	10	11	12	13	14	15	16	17	18	19	20	21	22	23	24	25	26	27	28	29	30	31	32	33	34	35	36	37	38	39
F	C	-								T											X	X	S	X	X	X	X	A		B		C					D	

130BC530.10

Table 13.1 Type Code String

Product group	1–6	
Model	7–10	
Mains Voltage	11–12	
Enclosure	13–15	
Hardware configuration	16–23	
RFI filter	16–17	
Brake	18	
Display (LCP)	19	
PCB coating	20	
Mains option	21	
Adaptation A	22	
Adaptation B	23	
Software release	24–27	
Software language	28	
A options	29–30	
B options	31–32	
C0 options, MCO	33–34	
C1 options	35	
C option software	36–37	
D options	38–39	

Table 13.2 Type Code Example for Ordering a Drive

Configure the correct drive for the proper application by using the internet-based drive configurator. The drive configurator is found on the global internet site: *www.danfoss.com/drives*. The configurator creates a type code string and an 8-digit sales number, which can be delivered to the local sales office. It is also possible to build a project list with several products and send it to a Danfoss sales representative.

An example of a type code string is:

FC-302N355T5E20H4TGCXXXSXXXXA0BXCXXXXD0

The meaning of the characters in the string is defined in this chapter. In the example above, an E3h drive is configured with the following options:

- RFI filter
- Safe Torque Off
- Coated PCB
- PROFIBUS DP-V1

Drives are delivered automatically with a language package relevant to the region from which they are ordered. Four regional language packages cover the following languages:

Language package 1
English, German, French, Danish, Dutch, Spanish, Swedish, Italian, and Finnish.

Language package 2
English, German, Chinese, Korean, Japanese, Thai, Traditional Chinese, and Bahasa Indonesian.

Language package 3
English, German, Slovenian, Bulgarian, Serbian, Romanian, Hungarian, Czech, and Russian.

Language package 4
English, German, Spanish, English US, Greek, Brazilian Portuguese, Turkish, and Polish.

To order drives with a different language package, contact the local Danfoss sales office.

 Danfoss A/S © 01/2018 All rights reserved.

13.1.1 Ordering Type Code for Enclosures D1h–D8h

Description	Pos	Possible choice
Product group	1-6	FC-302
Model	7–10	N55: 55 kW (60 hp) N75: 75 kW (75 hp) N90: 90 kW (100–125 hp) N110: 110 kW (125–150 hp) N132: 132 kW (150–200 hp) N160: 160 kW (200–250 hp) N200: 200 kW (250–300 hp) N250: 250 kW (300–350 hp) N315: 315 kW (350–450 hp)
Mains voltage	11-12	T5: 380–500 V AC T7: 525–690 V AC
Enclosure	13-15	E20: IP20 (chassis - for installation in an external enclosure) E2S: IP20/chassis - D3h Frame E21: IP21 (NEMA 1) E2D: IP21/Type-1 D1h Frame E54: IP54 (NEMA 12) E5D: IP54/Type-12 D1h Frame E2M: IP21 (NEMA 1) with mains shield E5M: IP54 (NEMA 12) with mains shield C20: IP20 (chassis) + stainless steel back channel C2S: IP20/chassis with stainless steel back channel - D3h Frame H21: IP21 (NEMA 1) + heater H54: IP54 (NEMA 12) + heater
RFI filter	16-17	H2: RFI filter, class A2 (standard) H4: RFI filter class A1[1)]
Brake	18	X: No brake IGBT B: Brake IGBT mounted R: Regeneration terminals S: Brake + regeneration (IP20 only)
Display	19	G: Graphical Local Control Panel LCP N: Numerical Local Control Panel (LCP) X: No Local Control Panel
PCB coating	20	C: Coated PCB R: Coated PCB + ruggedized
Mains option	21	X: No mains option 3: Mains disconnect and fuse 4: Mains contactor + fuses 7: Fuse A: Fuse and load sharing (IP20 only) D: Load share terminals (IP20 only) E: Mains disconnect + contactor + fuses J: Circuit breaker + fuses
Adaptation	22	X: Standard cable entries
Adaptation	23	X: No adaptation Q: Heat sink access panel
Software release	24-27	Actual software
Software language	28	X: Standard language pack

Table 13.3 Ordering Type Code for Enclosures D1h–D8h

1) Available for all D-frames.

 Danfoss A/S © 01/2018 All rights reserved.

13.1.2 Ordering Type Code for Enclosures E1h–E4h

Description	Position	Possible option
Product group	1–6	FC-302
Model	7–10	N315: 315 kW (450 hp) N355: 355 kW (400–500 hp) N400: 400 kW (400–550 hp) N450: 450 kW (600 hp) N500: 500 kW (500–650 hp) N560: 560 kW (600 hp) N630: 630 kW (650 hp) N710: 710 kW (750 hp)
Mains voltage	11–12	T5: 380–500 V AC T7: 525–690 V AC
Enclosure	13–15	E00: IP00/Chassis (only enclosures E3h/E4h with top regen/loadshare) E20: IP20/Chassis E21: IP21/Type 1 E54: IP54/Type 12 E2M: IP21/Type 1 + mains shield E5M: IP54/Type 12 + mains shield H21: IP21/Type 1 + space heater H54: IP54/Type 12 + space heater C20: IP20/Type 1 + stainless steel back channel C21: IP21/Type 1 + stainless steel back channel C54: IP54/Type 12 + stainless steel back channel C2M: IP21/Type 1 + mains shield + stainless steel back channel C5M: IP54/Type 12 + mains shield + stainless steel back channel C2H: IP21/Type 1 + space heater + stainless steel back channel C5H: IP54/Type 12 + space heater + stainless steel back channel
RFI filter	16–17	H2: RFI filter, class A2 (C3) H4: RFI filter, class A1 (C2)
Brake	18	X: No brake chopper B: Brake chopper mounted T: Safe Torque Off (STO) U: Brake chopper + safe torque off R: Regen terminals S: Brake chopper + regen terminals (only enclosures E3h/E4h)
Display	19	X: No LCP G: Graphical LCP (LCP-102) J: No LCP + USB through the door L: Graphical LCP + USB through the door
Coating PCB	20	C: Coated PCB R: Coated PCB 3C3 + ruggedized
Mains option	21	X: No mains option 3: Mains disconnect + fuses 7: Fuses A: Fuses + load share terminals (only enclosures E3h/E4h) D: Load share terminals (only enclosures E3h/E4h)
Hardware, adaptation A	22	X: No option
Hardware, adaptation B	23	X: No option Q: Heat sink access
Software release	24–28	SXXX: Latest release - standard software S067: Integrated motion control software
Software language	28	X: Standard language pack

Table 13.4 Ordering Type Code for Enclosures E1h–E4h

 Danfoss A/S © 01/2018 All rights reserved.

13.1.3 Ordering Options for All VLT® AutomationDrive FC 302 Enclosures

Description	Pos	Possible option
A options	29–30	AX: No A option A0: VLT® PROFIBUS DP MCA 101 (standard) A4: VLT® DeviceNet MCA 104 (standard) A6: VLT® CANopen MCA 105 (standard) A8: VLT® EtherCAT MCA 124 AT: VLT® PROFIBUS Converter MCA 113 AU: VLT® PROFIBUS Converter MCA 114 AL: VLT® PROFINET MCA 120 AN: VLT® EtherNet/IP MCA 121 AQ: VLT® Modbus TCP MCA 122 AY: VLT® Powerlink MCA 123
B options	31–32	BX: No option B2: VLT® PTC Thermistor Card MCB 112 B4: VLT® Sensor Input MCB 114 B6: VLT® Safety Option MCB 150 B7: VLT® Safety Option MCB 151 B8: VLT® Safety Option MCB 152 BK: VLT® General Purpose I/O MCB 101 BP: VLT® Relay Card MCB 105 BR: VLT® Encoder Input MCB 102 MCB 102 BU: VLT® Resolver Input MCB 103 BZ: VLT® Safe PLC I/O MCB 108
C options	33–34	CX: No option C4: VLT® Motion Control Option MCO 305
C1 options	35	X: No option R: VLT® Extended Relay Card MCB 113
C option software	36–37	XX: Standard controller 10: VLT® Synchronizing Controller MCO 350 (requires C4 option) 11: VLT® Position Controller MCO 351 (requires C4 option)
D options	38–39	DX: No option D0: VLT® 24 V DC Supply MCB 107

Table 13.5 Ordering Type Codes for FC 302 Options

 Danfoss A/S © 01/2018 All rights reserved.

13.2 Ordering Numbers for Options and Accessories

13.2.1 Ordering Numbers for A Options: Fieldbuses

Description	Ordering number	
	Uncoated	Coated
VLT® PROFIBUS DP MCA 101	130B1100	130B1200
VLT® DeviceNet MCA 104	130B1102	130B1202
VLT® CANopen MCA 105	130B1103	130B1205
VLT® PROFIBUS Converter MCA 113	–	130B1245
VLT® PROFIBUS Converter MCA 114	–	130B1246
VLT® PROFINET MCA 120	130B1135	130B1235
VLT® EtherNet/IP MCA 121	130B1119	130B1219
VLT® Modbus TCP MCA 122	130B1196	130B1296
VLT® Powerlink MCA 123	130B1489	130B1490
VLT® EtherCAT MCA 124	130B5546	130B5646

Table 13.6 Ordering Numbers for A Options

For information on fieldbus and application option compatibility with older software versions, contact the Danfoss supplier.

13.2.2 Ordering Numbers for B Options: Functional Extensions

Description	Ordering number	
	Uncoated	Coated
VLT® General Purpose I/O MCB 101	130B1125	130B1212
VLT® Encoder Input MCB 102	130B1115	130B1203
VLT® Resolver Input MCB 103	130B1127	130B1227
VLT® Relay Card MCB 105	130B1110	130B1210
VLT® Safe PLC I/O MCB 108	130B1120	130B1220
VLT® PTC Thermistor Card MCB 112	–	130B1137
VLT® Sensor Input MCB 114	130B1172	130B1272
VLT® Safety Option MCB 150	–	130B3280
VLT® Safety Option MCB 151	–	130B3290
VLT® Safety Option MCB 152	–	130B9860

Table 13.7 Ordering Numbers for B Options

13.2.3 Ordering Numbers for C Options: Motion Control and Relay Card

Description	Ordering number	
	Uncoated	Coated
VLT® Motion Control Option MCO 305	130B1134	130B1234
VLT® Synchronizing Controller MCO 350	130B1152	130B1252
VLT® Position Controller MCO 351	130B1153	120B1253
VLT® Center Winder MCO 352	130B1165	130B1166
VLT® Extended Relay Card MCB 113	130B1164	130B1264

Table 13.8 Ordering Numbers for C Options

 Danfoss A/S © 01/2018 All rights reserved.

13.2.4 Ordering Numbers for D Option: 24 V Back-up Supply

Description	Ordering number	
	Uncoated	Coated
VLT® 24 V DC Supply MCB 107	130B1108	130B1208

Table 13.9 Ordering Numbers for D Option

13.2.5 Ordering Numbers for Software Options

Description	Ordering number
VLT® MCT 10 Set-up Software - 1 user.	130B1000
VLT® MCT 10 Set-up Software - 5 users.	130B1001
VLT® MCT 10 Set-up Software - 10 users.	130B1002
VLT® MCT 10 Set-up Software - 25 users.	130B1003
VLT® MCT 10 Set-up Software - 50 users.	130B1004
VLT® MCT 10 Set-up Software - 100 users.	130B1005
VLT® MCT 10 Set-up Software - unlimited users.	130B1006

Table 13.10 Ordering Numbers for Software Options

13.2.6 Ordering Numbers for D1h–D8h Kits

Type	Description	Ordering number
Miscellaneous hardware		
NEMA 3R outdoor weather shield, D1h	Shield designed to protect drive openings from direct sun, snow, and falling debris. Drives using this shield must be ordered from the factory as NEMA 3R ready, which is found in the type code as E5S enclosure option.	176F6302
NEMA 3R outdoor weather shield, D2h	Shield designed to protect drive openings from direct sun, snow, and falling debris. Drives using this shield must be ordered from the factory as NEMA 3R ready, which is found in the type code as E5S enclosure option.	176F6303
NEMA 3R for in-back/out-back cooling kit within a welded enclosure, D3h	Provides an ingress protection rating of NEMA 3R or NEMA 4. These enclosures are intended for outdoor use to provide protection against inclement weather.	176F3521
NEMA 3R for in-back/out-back cooling kit within a Rittal enclosure, D3h	Provides an ingress protection rating of NEMA 3R or NEMA 4. These enclosures are intended for outdoor use to provide protection against inclement weather.	176F3633
NEMA 3R for in-back/out-back cooling kit within a welded enclosure, D4h	Provides an ingress protection rating of NEMA 3R or NEMA 4. These enclosures are intended for outdoor use to provide protection against inclement weather.	176F3526
NEMA 3R for in-back/out-back cooling kit within a Rittal enclosure, D3h	Provides an ingress protection rating of NEMA 3R or NEMA 4. These enclosures are intended for outdoor use to provide protection against inclement weather.	176F3634
Adaptor plate, D1h/D3h	Plate used to replace an enclosure D1/D3 with the D1h/D3h using the same mounting configuration.	176F3409
Adaptor plate, D2h/D4h	Plate used to replace an enclosure D2/D4 with the D2h/D4h using the same mounting configuration.	176F3410
Back-channel duct kit, D3h	Duct kit that converts enclosure to either in-bottom/out-top venting or top only venting. Enclosure size: 1800 mm (70.9 in).	176F3627
Back-channel duct kit, D3h	Duct kit that converts enclosure to either in-bottom/out-top venting or top only venting. Enclosure size: 2000 mm (78.7 in).	176F3629
Back-channel duct kit, D4h	Duct kit that converts enclosure to either in-bottom/out-top venting or top only venting. Enclosure size: 1800 mm (70.9 in).	176F3628

 Danfoss A/S © 01/2018 All rights reserved.

Back-channel duct kit, D4h	Duct kit that converts enclosure to either in-bottom/out-top venting or top only venting. Enclosure size: 2000 mm (78.7 in).	176F3630	
Pedestal, D1h	Provides a 400 mm (15.7 in) pedestal that allows the drive to be floor mounted. The front of the pedestal has openings for input air to cool the power components.	176F3631	
Pedestal, D2h	Provides a 400 mm (15.7 in) pedestal that allows the drive to be floor mounted. The front of the pedestal has openings for input air to cool the power components.	176F3632	
Pedestal, D5h/D6h	Provides a 200 mm (7.9 in) pedestal that allows the drive to be floor mounted. The front of the pedestal has openings for input air to cool the power components.	176F3452	
Pedestal, D7h/D8h	Provides a 200 mm (7.9 in) pedestal that allows the drive to be floor mounted. The front of the pedestal has openings for input air to cool the power components.	176F3539	
Top entry of fieldbus cables, D1h–D8h	Allows for the installation of fieldbus cables through the top of the drive. The kit is IP20/chassis when installed, but a different mating connector can be used to increase the protection rating.	176F3594	
USB in the door, D1h–D8h (IP20/chassis)	USB extension cord kit to allow access to the drive controls via laptop computer without opening the drive.	Contact factory	
USB in the door, D1h–D8h (IP21/Type 1 and IP54/Type 12)	USB extension cord kit to allow access to the drive controls via laptop computer without opening the drive.	Contact factory	
Input plate option, D1h–D8h	Allows fuses, disconnect/fuses, RFI, FRI/fuses, and RFI/disconnect/fuses options to be added.	Contact factory	
Terminal blocks	Screw terminal blocks for replacing spring loaded terminals. (1 pc 10 pin 1 pc 6 pin and 1 pc 3-pin connectors)	130B1116	
Back-channel cooling kits		**Standard**	**Stainless steel**
In-back/out-back (Non-Rittal enclosures), D3h	Allows the cooling air to be directed in and out through the back of the drive. Does not include plates for mounting in the enclosure. This kit is used only for enclosure D3h.	176F3519	176F3520
In-back/out-back (Non-Rittal enclosures), D4h	Allows the cooling air to be directed in and out through the back of the drive. Does not include plates for mounting in the enclosure. This kit is used only for enclosure D4h.	176F3524	176F3525
In bottom/out back, D1h/D3h	Allows the cooling air to be directed in through the bottom and out through the back of the drive. This kit is used only for enclosures D1h/D3h.	176F3522	176F3523
In bottom/out back, D2h/D4h	Allows the cooling air to be directed in through the bottom and out through the back of the drive. This kit is used only for enclosures D2h/D4h.	176F3527	176F3528
In back/out back, D1h	Allows the cooling air to be directed in and out through the back of the drive. This kit is used only for enclosure D1h.	176F3648	176F3656
In back/out back, D2h	Allows the cooling air to be directed in and out through the back of the drive. This kit is used only for enclosure D2h.	176F3649	176F3657
In back/out back, D3h	Allows the cooling air to be directed in and out through the back of the drive. This kit is used only for enclosure D3h.	176F3625	176F3654
In back/out back, D4h	Allows the cooling air to be directed in and out through the back of the drive. This kit is used only for enclosure D4h.	176F3626	176F3655
In back/out back, D5h/D6h	Allows the cooling air to be directed in and out through the back of the drive. This kit is used only for enclosures D5h/D6h.	176F3530	–
In back/out back, D7h/D8h	Allows the cooling air to be directed in and out through the back of the drive. This kit is used only for enclosures D7h/D8h.	176F3531	–
LCP			
LCP 101	Numerical local control panel (NLCP).	130B1124	
LCP 102	Graphical Local control panel (GLCP).	130B1107	
LCP cable	Separate LCP cable, 3 m (9 ft).	175Z0929	

 Danfoss A/S © 01/2018 All rights reserved.

LCP kit, IP21	Panel mounting kit including graphical LCP, fasteners, 3 m (9 ft) cable and gasket.	130B1113
LCP kit, IP21	Panel mounting kit including numerical LCP, fasteners and gasket.	130B1114
LCP kit, IP21	Panel mounting kit for all LCPs including fasteners, 3 m (9 ft) cable and gasket.	130B1117
External options		
EtherNet/IP	Ethernet master.	175N2584

Table 13.11 Kits Available for Enclosures D1h–D8h

13.2.7 Ordering Numbers for E1h–E4h Kits

Type	Description	Ordering number	
Miscellaneous hardware			
PROFIBUS top entry, E1h–E4h	Top entry for enclosure protection rating IP54.	176F1742	
USB in the door, E1h–E4h	USB extension cord kit to allow access to the drive controls via laptop computer without opening the drive.	130B1156	
Ground bar	More grounding points for E1h and E2h drives.	176F6609	
Mains shield, E1h	Shielding (cover) mounted in front of the power terminals to protect from accidental contact.	176F6619	
Mains shield, E2h	Shielding (cover) mounted in front of the power terminals to protect from accidental contact.	176F6620	
Terminal blocks	Screw terminal blocks for replacing spring loaded terminals. (1 pc 10 pin 1 pc 6 pin and 1 pc 3-pin connectors)	130B1116	
Back-channel cooling kits		**Standard**	**Stainless steel**
In bottom/out top, E3h	Allows the cooling air to be directed in through the bottom and out through the top of the drive. This kit is used only for enclosure E3h with the 600 mm (21.6 in) base plate.	176F6606	–
In bottom/out top, E3h	Allows the cooling air to be directed in through the bottom and out through the top of the drive. This kit used only for enclosure E3h with 800 mm (31.5 in) base plate.	176F6607	–
In bottom/out top, E4h	Allows the cooling air to be directed in through the bottom and out through the top of the drive. This kit is used only for enclosure E4h with the 800 mm (31.5 in) base plate.	176F6608	–
In back/out back, E1h	Allows the cooling air to be directed in and out through the back of the drive. This kit is used only for enclosure E1h.	176F6617	–
In back/out back, E2h	Allows the cooling air to be directed in and out through the back of the drive. This kit is used only for enclosure E2h.	176F6618	–
In back/out back, E3h	Allows the cooling air to be directed in and out through the back of the drive. This kit is used only for enclosure E3h.	176F6610	–
In back/out back, E4h	Allows the cooling air to be directed in and out through the back of the drive. This kit is used only for enclosure E4h.	176F6611	–
In bottom/out back, E3h	Allows the cooling air to be directed in through the bottom and out through the back of the drive. This kit is used only for enclosure E3h with the 600 mm (21.6 in) base plate.	176F6612	–
In bottom/out back, E3h	Allows the cooling air to be directed in through the bottom and out through the back of the drive. This kit used only for enclosure E3h with the 800 mm (31.5 in) base plate.	176F6613	–
In bottom/out back, E4h	Allows the cooling air to be directed in through the bottom and out through the back of the drive. This kit is used only for enclosure E4h with 800 mm (31.5 in) base plate.	176F6614	–
In back/out top, E3h	Allows the cooling air to be directed in through the back and out through the top of the drive. This kit is used only for enclosure E3h.	176F6615	–
In back/out top, E4h	Allows the cooling air to be directed in through the back and out through the top of the drive. This kit is used only for enclosure E4h.	176F6616	–

 Danfoss A/S © 01/2018 All rights reserved.

LCP		
LCP 101	Numerical local control panel (NLCP).	130B1124
LCP 102	Graphical Local control panel (GLCP).	130B1107
LCP cable	Separate LCP cable, 3 m (9 ft).	175Z0929
LCP kit, IP21	Panel mounting kit including graphical LCP, fasteners, 3 m (9 ft) cable and gasket.	130B1113
LCP kit, IP21	Panel mounting kit including numerical LCP, fasteners and gasket.	130B1114
LCP kit, IP21	Panel mounting kit for all LCPs including fasteners, 3 m (9 ft) cable and gasket.	130B1117
External options		
EtherNet/IP	Ethernet master.	175N2584

Table 13.12 Kits Available for Enclosures E1h–E4h

13.3 Ordering Numbers for Filters and Brake Resistors

Refer to the following design guides for dimensioning specifications and ordering numbers for filters and brake resistors:

- *VLT® Brake Resistor MCE 101 Design Guide*.
- *VLT® Advanced Harmonic Filters AHF 005/AHF 010 Design Guide*.
- *Output Filters Design Guide*.

13.4 Spare Parts

Consult the VLT® Shop or the Drive Configurator (*www.danfoss.com/drives*) for the spare parts that are available for your application.

 Danfoss A/S © 01/2018 All rights reserved.

14 Appendix

14.1 Abbreviations and Symbols

60° AVM	60° asynchronous vector modulation
A	Ampere/AMP
AC	Alternating current
AD	Air discharge
AEO	Automatic energy optimization
AI	Analog input
AIC	Ampere interrupting current
AMA	Automatic motor adaptation
AWG	American wire gauge
°C	Degrees Celsius
CB	Circuit breaker
CD	Constant discharge
CDM	Complete drive module: The drive, feeding section, and auxiliaries
CE	European conformity (European safety standards)
CM	Common mode
CT	Constant torque
DC	Direct current
DI	Digital input
DM	Differential mode
D-TYPE	Drive dependent
EMC	Electromagnetic compatibility
EMF	Electromotive force
ETR	Electronic thermal relay
°F	Degrees Fahrenheit
f_{JOG}	Motor frequency when jog function is activated
f_M	Motor frequency
f_{MAX}	Maximum output frequency that the drive applies on its output
f_{MIN}	Minimum motor frequency from the drive
$f_{M,N}$	Nominal motor frequency
FC	Frequency converter (drive)
FSP	Fixed-speed pump
HIPERFACE®	HIPERFACE® is a registered trademark by Stegmann
HO	High overload
Hp	Horse power
HTL	HTL encoder (10–30 V) pulses - High-voltage transistor logic
Hz	Hertz
I_{INV}	Rated inverter output current
I_{LIM}	Current limit
$I_{M,N}$	Nominal motor current
$I_{VLT,MAX}$	Maximum output current
$I_{VLT,N}$	Rated output current supplied by the drive
kHz	Kilohertz
LCP	Local control panel
Lsb	Least significant bit
m	Meter
mA	Milliampere
MCM	Mille circular mil
MCT	Motion control tool
mH	Inductance in milli Henry
mm	Millimeter
ms	Millisecond
Msb	Most significant bit
η_{VLT}	Efficiency of the drive defined as ratio between power output and power input
nF	Capacitance in nano Farad
NLCP	Numerical local control panel
Nm	Newton meter
NO	Normal overload
n_s	Synchronous motor speed
On/Offline Parameters	Changes to online parameters are activated immediately after the data value is changed
$P_{br,cont.}$	Rated power of the brake resistor (average power during continuous braking)
PCB	Printed circuit board
PCD	Process data
PDS	Power drive system: CDM and a motor
PELV	Protective extra low voltage
P_m	Drive nominal output power as high overload
$P_{M,N}$	Nominal motor power
PM motor	Permanent magnet motor
Process PID	Proportional integrated differential regulator that maintains the speed, pressure, temperature, etc
$R_{br,nom}$	Nominal resistor value that ensures a brake power on the motor shaft of 150/160% for 1 minute
RCD	Residual current device
Regen	Regenerative terminals
R_{min}	Minimum allowed brake resistor value by the drive
RMS	Root average square
RPM	Revolutions per minute
R_{rec}	Recommended brake resistor resistance of Danfoss brake resistors
s	Second
SCCR	Short-circuit current rating
SFAVM	Stator flux-oriented asynchronous vector modulation
STW	Status word
SMPS	Switch mode power supply
THD	Total harmonic distortion
T_{LIM}	Torque limit
TTL	TTL encoder (5 V) pulses - transistor logic
$U_{M,N}$	Nominal motor voltage
UL	Underwriters Laboratories (US organization for the safety certification)
V	Volts

 Danfoss A/S © 01/2018 All rights reserved.

VSP	Variable-speed pump
VT	Variable torque
VVC+	Voltage vector control plus

Table 14.1 Abbreviations and Symbols

14.2 Definitions

Brake resistor
The brake resistor is a module capable of absorbing the brake power generated in regenerative braking. This regenerative brake power increases the DC-link voltage and a brake chopper ensures that the power is transmitted to the brake resistor.

Break-away torque

$$n_s = \frac{2 \times par.\ 1-23 \times 60\ s}{par.\ 1-39}$$

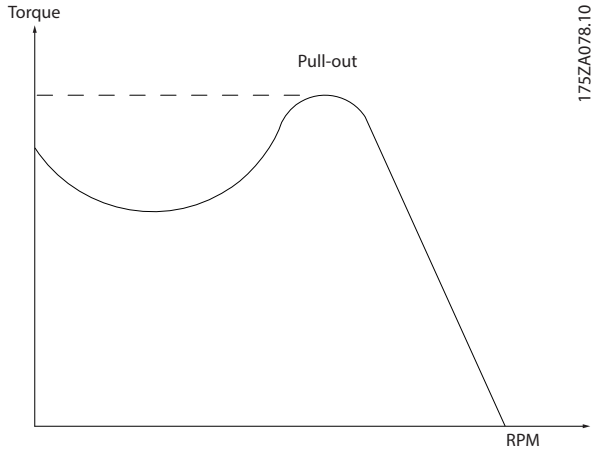

Illustration 14.1 Break-away Torque Chart

Coast
The motor shaft is in free mode. No torque on the motor.

CT characteristics
Constant torque characteristics used for all applications such as conveyor belts, displacement pumps, and cranes.

Initializing
If initializing is carried out (*parameter 14-22 Operation Mode*), the drive returns to the default setting.

Intermittent duty cycle
An intermittent duty rating refers to a sequence of duty cycles. Each cycle consists of an on-load and an off-load period. The operation can be either periodic duty or non-periodic duty.

Power factor
The true power factor (lambda) takes all the harmonics into consideration and is always smaller than the power factor (cos phi) that only considers the 1st harmonics of current and voltage.

$$\cos\phi = \frac{P\ (\mathrm{kW})}{P\ (\mathrm{kVA})} = \frac{U\lambda\ x\ I\lambda\ x\ \cos\phi}{U\lambda\ x\ I\lambda}$$

Cos phi is also known as displacement power factor.

Both lambda and cos phi are stated for Danfoss VLT® drives in *chapter 7.3 Mains Supply*.

The power factor indicates to which extent the drive imposes a load on the mains. The lower the power factor, the higher the I_{RMS} for the same kW performance. In addition, a high-power factor indicates that the harmonic currents are low.

All Danfoss drives have built-in DC coils in the DC link to have a high-power factor and reduce the THD on the main supply.

Pulse input/incremental encoder
An external digital sensor used for feedback information of motor speed and direction. Encoders are used for high-speed accuracy feedback and in high dynamic applications.

Set-up
Save parameter settings in 4 set-ups. Change between the 4 parameter set-ups and edit 1 set-up while another set-up is active.

Slip compensation
The drive compensates for the motor slip by giving the frequency a supplement that follows the measured motor load, keeping the motor speed almost constant.

Smart logic control (SLC)
The SLC is a sequence of user-defined actions executed when the associated user-defined events are evaluated as true by the SLC. (*Parameter group 13-** Smart Logic*).

FC standard bus
Includes RS485 bus with FC protocol or MC protocol. See *parameter 8-30 Protocol*.

Thermistor
A temperature-dependent resistor placed where the temperature is to be monitored (drive or motor).

Trip
A state entered in fault situations, such as when the drive is subject to an overtemperature or when it protects the motor, process, or mechanism. Restart is prevented until the cause of the fault has disappeared and the trip state is canceled.

Trip lock
A state entered in fault situations when the drive is protecting itself and requires physical intervention. A locked trip can only be canceled by cutting off mains, removing the cause of the fault, and reconnecting the drive. Restart is prevented until the trip state is canceled by activating reset.

VT characteristics
Variable torque characteristics for pumps and fans.

 Danfoss A/S © 01/2018 All rights reserved.

Index

A

Abbreviations 202
AC brake 23
Acoustic noise 160
Active reference 175
Airflow
Configurations 29, 30
Rates 140
Alarm reset 187
Altitude 141
Ambient conditions
Overview 138
Specifications 44
Analog
Input specifications 45
Input/output descriptions and default settings 150
Output specifications 46
Wiring configuration for speed reference 185
ATEX monitoring 20, 139
Auto on 175
Automatic energy optimization (AEO) 18
Automatic motor adaptation (AMA)
Overview 19
Wiring configuration 184
Automatic switching frequency modulation 18

B

Back-channel cooling 29, 140
Brake resistor
Definition 202
Design guide 4
Formula for rated power 201
Ordering 200
Overview 34
Selecting 155
Terminals 147
Wiring schematic 145
Braking
Capability chart 156
Control with brake function 157
Dynamic braking 23
Electro-magnetic brake 24
Electro-mechanical brake 190
Limits 157
Mechanical holding brake 24
Static braking 24
Use as an alternative brake function 158
Wiring configuration for mechanical brake 189
Break-away torque 202

C

Cable clamp 148
Cables
Brake 147
Control 148
Equalizing 148
Maximum number and size per phase 36
Motor cables 153
Opening 49, 55, 71, 80, 91, 101, 112
Power connections 146
Routing 148
Shielding 146, 170
Specifications 36, 38, 40, 42, 45
Type and ratings 144
Calculations
Brake resistance 157
Braking torque 157
Harmonic software 174
Resistor duty cycle 155
Scaled reference 176
Short-circuit ratio 173
THDi 172
CANOpen 31
Capacitor storage 138
CE mark 7
Circuit breaker 152, 159
Closed loop 179, 180, 184
Commercial environment 167
Common-mode filter 35
Compliance
Directives 7
With ADN 6
Condensation 138
Conducted emission 167
Control
Characteristics 47
Description of operation 175
Structures 179
Types of 180
Control cables 148
Control card
Overtemperature trip point 36
RS485 specifications 46
Specifications 48
Control terminals 149
Controller 34
Conventions 4
Cooling
Dust warning 139
Overview of back-channel cooling 29
Requirements 140
CSA/cUL approval 8

 Danfoss A/S © 01/2018 All rights reserved.

Current
Distortion 172
Formula for current limit 201
Fundamental current 172
Harmonic current 172
Internal current control 183
Leakage current 158
Mitigating motor 155
Rated output current 201
Transient ground 159

D

DC brake 23

DC bus
Description of operation 175
Terminals 147

Derating
Altitude 141
Automatic feature 18
Low-speed operation 141
Overview and causes 140
Specifications 44
Temperature and switching frequency 142

Derating 140

DeviceNet 31, 196

Digital
Input specifications 45
Input/output descriptions and default settings 150
Output specifications 46

Dimensions
D1h exterior 49
D1h terminal 53
D2h exterior 55
D2h terminal 59
D3h exterior 61
D3h terminal 64
D4h exterior 66
D4h terminal 69
D5h exterior 71
D5h terminal 76
D6h exterior 80
D6h terminal 85
D7h exterior 91
D7h terminal 97
D8h exterior 101
D8h terminal 106
E1h exterior 112
E1h terminal 116
E2h exterior 118
E2h terminal 122
E3h exterior 124
E3h terminal 128
E4h exterior 131
E4h terminal 135
Product series overview 13

Discharge time 5

Disconnect 152

Door clearance 49, 55, 71, 80, 91, 101, 112

Drive
Clearance requirements 140
Configurator 192
Dimensions of product series 13
Power ratings 13

DU/dt
Overview 160
Test results for D1h–D8h 161
Test results for E1h–E4h 162

Duct cooling 140

Duty cycle
Calculation 155
Definition 202

E

EAC mark 8

Efficiency
Calculation 159
Formula for drive efficiency 201
Specifications 36, 38, 40, 42
Using AMA 19

Electrical specifications 380–500 V 37

Electrical Specifications 525–690 V 40, 42

Electromagnetic interference 19

Electro-mechanical brake 190

Electronic thermal overload 20

Electronic thermal relay (ETR) 144

EMC
Compatibility 169
Directive 7
General aspects 166
Installation 171
Interference 170
Test results 167

Emission requirements 167

Enclosure protection 9

Encoder
Configuration 190
Definition 202
Determining encoder direction 190
VLT® Encoder Input MCB 102 32

Energy efficiency class 44

Environment 44, 138

ErP directive 7

EtherCAT 32

EtherNet/IP 32

Explosive atmosphere 139

Export control regulations 8

Extended relay card 34

 Danfoss A/S © 01/2018 All rights reserved.

Exterior dimensions
D1h 49
D2h 55
D3h 61
D4h 66
D5h 71
D6h 80
D7h 91
D8h 101
E1h 112
E2h 118
E3h 124
E4h 131
External alarm reset wiring configuration 187

F

Fans
Required airflow 140
Temperature-controlled fans 19
Feedback
Conversion 179
Handling 178
Signal 180
Fieldbus 31, 148
Filters
Common-mode filter 35
DU/dt filter 35
Harmonic filter 35
Ordering 200
RFI filter 169
Sine-wave filter 35, 146
Flux
Control structure in flux sensorless 182
Control structure in flux with motor feedback 183
Flying start 21
Formula
Current limit 201
Drive efficiency 201
Output current 201
Rated power of the brake resistor 201
Fourier series analysis 172
Frequency bypass 22
Fuses
For use with power connections 146
Overcurrent protection warning 144
Specifications 151

G

Galvanic isolation 19, 46, 169
Gases 138
General purpose I/O module 32
Gland plate 49, 55, 71, 80, 91, 101, 112
Grounding 19, 148, 158

H

Hand on 175
Harmonics
Definition of power factor 202
EN standards 173
Filter 35
IEC standards 173
Mitigation 174
Overview 172
Heat sink
Access panel 114
Cleaning 139
Overtemperature trip point 36
Required airflow 140
Heater
Usage 138
Wiring schematic 145
High voltage warning 5
High-altitude installation 170
Hoisting 24, 25
Humidity 138

I

Immunity requirements 168
Input specifications 45
Installation
Electrical 144
Qualified personnel 5
Requirements 140
Insulation 155
Inverter 175
IP rating 9
IT grid 159

K

Kinetic back-up 21
Kits
Descriptions 199, 200
Enclosure availability 16
Ordering numbers 199, 200
Knockout panel 113

L

Language packages 192
Leakage current 5, 158
Lifting 24, 138
see also *Hoisting*

 Danfoss A/S © 01/2018 All rights reserved.

Load share
Overview 27
Short-circuit protection 17
Terminals 28, 147
Warning 5
Wiring schematic 145

Low voltage
Directive 7

Low-speed operation 141

M

Machinery directive 7

Mains
Drop-out 21
Fluctuations 19
Shield 5
Specifications 44
Supply specifications 44

Maintenance 139

Marine certification 8

Mechanical brake
Using closed-loop control 25
Using open-loop control 24
Wiring configuration 189

Modbus
Option 32

Modulation 18, 201

Motion control option 34

Motor
Break-away torque 202
Cables 146, 153, 158
Class protection 139
Ex-e 20, 33
Feedback 183
Full torque 22
Insulation 155
Leakage current 158
Missing phase detection 18
Mitigating bearing currents 155
Nameplate 21
Output specifications 44
Parallel connection 153
Rotation 153
Thermal protection 20, 153
Thermistor wiring configuration 188
Wiring schematic 145

Mounting configurations 140

N

NEMA protection rating 9

O

Open loop 179

Operating guide 4

Options
Enclosure availability 13
Fieldbus 31
Functional extensions 32
Motion control 34
Ordering 194, 196, 197
Relay cards 34

Ordering 192

Output
Contactor 159, 171
Specifications 46
Switch 18

Overcurrent protection 144

Overload
Electronic thermal overload 20
Issue with harmonics 172
Limits 18

Overtemperature 202

Overvoltage
Alternative brake function 158
Braking 34
Protection 17

P

PC connection 147

PELV 19, 46, 169

Periodic forming 138

Personal computer 147

PID
Controller 20, 178, 181

Pigtails 169

PLC 148

Point of common coupling 172

Positioning controller 34

Potentiometer 150, 187

Power
Connections 146
Factor 202
Losses 36, 38, 40, 42
Ratings 11, 36, 38, 40, 42

POWERLINK 32

Preheat 22

Process control 180

PROFIBUS 31, 196

PROFINET 31

Programming guide 4

 Danfoss A/S © 01/2018 All rights reserved.

Protection
Brake function 17
Enclosure rating 13
Motor thermal 20
Overcurrent 144
Overload 18
Overvoltage 17
Rating 9
Short circuit 17
Supply voltage imbalance 18

PTC thermistor card 33

Pulse
Input specifications 46
Wiring configuration for start/stop 186

Q

Qualified personnel 5

R

Radiated emission 167

Radio frequency interference 19

RCM mark 8

Rectifier 175

Reference
Active reference 175
Remote handling of 176
Remote reference 176
Speed input 185

Regen
Availability 13
Overview 28
Terminals 64, 116

Relay
ADN-compliant installation 6
Card 34
Extended relay card option 34
Option 33
Specifications 47
Terminals 150

Remote reference 176

Residential environment 167

Residual current device 158, 159

Resistor brake 23

Resolver option 33

Resonance damping 19

Restart 22

RFI
Filter 169
Location of E3h shield termination 127
Location of E4h shield termination 134
Using switch with IT grid 159

Rise time 160

Rotor 18

RS485
Terminals 149
Wiring configuration 188
Wiring schematic 145

S

Safe PLC interface option 33

Safe Torque Off
Machinery directive compliance 7
Operating guide 4
Overview 23
Terminal location 150
Wiring configuration 185
Wiring schematic 145

Safety
Instructions 5, 144
Options 33

Scaled reference 176

Sensor input option 33

Serial communication 149

Shielding
Cables 146, 148
Mains 5
RFI termination 127
Twisted ends 169

Short circuit
Braking 24, 157
Definition 202
Protection 17
Ratio calculation 173
SCCR rating 152

Sine-wave filter 35, 146

Slip compensation 202

Smart logic control
Overview 22
Wiring configuration 189

Software versions 196

Spare parts 200

Specifications electrical 36, 38, 40, 42

Speed
Control 180
PID feedback 180
Wiring configuration for speed reference 187
Wiring configuration for speed up/down 187

Start/stop wiring configuration 185, 186

STO 4
see also *Safe Torque Off*

Storage 138

Switch
A53 and A54 45, 150

Switches
Disconnect 152

 Danfoss A/S © 01/2018 All rights reserved.

Switching frequency
Derating 18, 142
Power connections 146
Sine-wave filter 35, 146
Use with RCDs 159

Synchronizing controller 34

T

Temperature 138

Terminal dimensions
D1h 53
D2h 59
D3h 64
D4h 69
D5h 76
D6h 85
D7h 97
D8h 106
E1h 116
E2h 122
E3h 128
E4h 135

Terminals
Analog input/output 150
Brake resistor 147
Control descriptions and default settings 149
Digital input/output 150
Load share 147
Relay terminals 150
RS485 149
Serial communication 149
Terminal 37 150

Thermistor
Cable routing 148
Definition 202
Terminal location 150
Wiring configuration 188

Torque
Characteristic 44
Control 180
Wiring configuration for torque and stop limit 190

Transducer 150

Transformer
Effects of harmonics 172

Trip
Definition 202
Points for 380–500 V drives 36, 38
Points for 525–690 V drives 40, 42

TÜV certificate 8

Type code 192

U

UKrSEPRO certificate 8

UL
Enclosure protection rating 9
Listing mark 8

USB specifications 48

User input 175

V

Voltage imbalance 18

VVC+ 181, 183

W

Warnings 5, 144

Wires 144
see also *Cables*

Wiring schematic
Drive 145
Typical application examples 184

 Danfoss A/S © 01/2018 All rights reserved.

B&P ELEKTROMOTOREN BV

Ampèrestraat 8F
4004 KB Tiel

info@bnpelektromotoren.nl
+31 (0)344 616 267

BTW nr. **NL819113918B01**
KvK nr. **30237800**
ING Bank **NL60 INGB 0675 304 792**

B&P Elektromotoren

www.bnpelektromotoren.nl